NIAGARA™
PUMPS THE SMART CHOICE

SS

Submersible Pump

Sheet Metal Fabricated Submersible Pump

50 / 60 Hz

SS SUBMERSIBLE PUMP

NIAGARA Sheet Metal SS Subnersible Pump are specially designed, with the use of latest manufacturing techniques. Years of experience, superior design and better manufacturing techniques have resulted into development of this range of pumps, which are efficient and reliable in operation. Strict quality assurance standards during the total process assure trouble free and reliability in operation requiring minimum maintenance. The pump range consist of many pump sizes is available with an optional number of stages to match any duty point.

Special Features of Pumps

1. Low weight high efficiency
2. Suction Case , stage casing and discharge chambers are made by stainless steel (AISI 304 Grade)from sheet metal so rust free and long service life
3. Bearing bush is made of anti friction rubber to withstand wear resistance.
4. Redial flow and mixed flow impellers & bowl made from stainless steel (AISI 304 Grade).
5. Non return Valve made in stainless steel (AISI 304 Grade). The valve casing is designed for optimum hydraulic properties to minimize the pressure loss across the valve and, thus, contributes to the high efficiency of the pump.
6. All bearings are water- lubricated and have a square shape, enabling sand particles, if any, to leave the pump together with the pumped liquid.
7. The inlet strainer prevents particles over a certain size from entering the pump.
8. Stop Ring which is designed as thrust bearings limits axial movements of pump shaft.
9. Pump motor coupling is according to NEMA standard.
10. Suitable to 4" , 6 " & 8" Submersible Motor.

Standard Specification :

1. Operating Limit in 50 hz
   Capacity : maximum 78m3/h
   Head : Maximum 440 Mtr.
   Liquid Temperature : 0^0C bis +60^0 C
   Send Content : max. 50g/m3
2. Operating Limit in 60 hz
   Capacity : maximum 118m3/h
   Head : Maximum 460 Mtr.
   Liquid Temperature : 0^0C bis +60^0 C
   Send Content : max. 60g/m3
3. Starting Per hour : Max 15 to 20
4. Normal Outlet Size : 2", 2.5" , 3" & 4"
5. Immersion : 1 Mtr minimum
6. Pumped liquid : Clean Free from solid chemically natural and close to the characteristics of water

Application

• Irrigation and Drip Irrigation • Sprinkler, Gardening and Nursery • Domestic water supply. • Bungalows.
• Housing complexes • Ornamental fountains • Small farms • Industrial water supply schemes • Fire Fighting Systems

50/60 Hz

SS Submersible Pump

Technical Data NP - 10

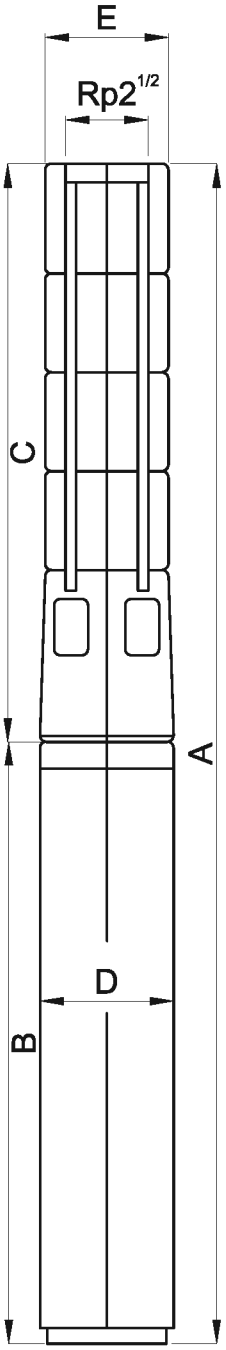

PUMP TYPE	MOTOR TYPE	MOTOR RATING		C	DIMENSION IN mm							Net Weight (Kg)		
					B		A		D	E*	E**	Pump	Motor	
		KW	HP		1 X 230V	3 X 400V	1 X 230V	3 X 400V					1 X 230V	3 X 400V
NP10-1	4WF75	.55	.75	314	450	—	764	—	95	131	—	7	9	—
NP10-2	4WF15	1.1	1.5	374	500	—	874	—	95	131	—	9	10	—
NP10-3	4WF20	1.5	2	435	535	—	970	—	95	131	—	10	14	—
NP10-4	4WFSS30	2.2	3	495	—	678	—	1173	95	131	—	11	—	23
NP10-5	4WFSS30	2.2	3	556	—	678	—	1234	95	131	—	12	—	23
NP10-6	4WFSS40	3	4	616	—	718	—	1334	95	131	—	14	—	26
NP10-7	4WFSS40	3	4	677	—	718	—	1395	95	131	—	15	—	26
NP10-8	4WFSS55	4	5.5	737	—	778	—	1515	95	131	—	16	—	27
NP10-9	4WFSS55	4	5.5	798	—	778	—	1576	95	131	—	17	—	27
NP10-10	4WFSS75	5.5	7.5	856	—	918	—	1776	95	131	—	18	—	34
NP10-11	4WFSS75	5.5	7.5	919	—	918	—	1837	95	131	—	20	—	34
NP10-12	4WFSS75	5.5	7.5	979	—	918	—	1897	95	131	—	21	—	34
NP10-13	4WFSS75	5.5	7.5	1040	—	918	—	1958	95	131	—	22	—	34
NP10-14	4WFSS10	7.5	10	1116	—	1058	—	2174	95	131	—	23	—	39
NP10-15	4WFSS10	7.5	10	1177	—	1058	—	2235	95	131	—	25	—	39
NP10-16	4WFSS10	7.5	10	1237	—	1058	—	2295	95	131	—	26	—	39
NP10-17	4WFSS10	7.5	10	1298	—	1058	—	2356	95	131	—	27	—	39
NP10-18	4WFSS10	7.5	10	1358	—	1058	—	2416	95	131	—	28	—	39
NP10-12	6WFCI75	5.5	7.5	979	—	729	—	1708	142	143	145	21	—	48
NP10-13	6WFCI75	5.5	7.5	1040	—	729	—	1769	142	143	145	22	—	48
NP10-14	6WFCI75	5.5	7.5	1106	—	729	—	1835	142	143	145	23	—	48
NP10-15	6WFCI10	7.5	10	1177	—	759	—	1936	142	143	145	25	—	51
NP10-16	6WFCI10	7.5	10	1237	—	759	—	1996	142	143	145	26	—	51
NP10-17	6WFCI10	7.5	10	1298	—	759	—	2057	142	143	145	27	—	51
NP10-18	6WFCI10	7.5	10	1358	—	759	—	2117	142	143	145	28	—	51
NP10-19	6WFCI12	9.3	12.5	1419	—	829	—	2248	142	143	145	30	—	53
NP10-20	6WFCI12	9.3	12.5	1479	—	829	—	2309	142	143	145	31	—	53
NP10-21	6WFCI12	9.3	12.5	1540	—	829	—	2369	142	143	145	32	—	53
NP10-22	6WFCI12	9.3	12.5	1600	—	829	—	2429	142	143	145	33	—	53
NP10-23	6WFCI15	11	15	1661	—	849	—	2510	142	143	145	34	—	60
NP10-24	6WFCI15	11	15	1721	—	849	—	2576	142	143	145	36	—	60
NP10-25	6WFCI15	11	15	1782	—	849	—	2631	142	143	145	37	—	60
NP10-26	6WFCI15	11	15	1842	—	849	—	2691	142	143	145	38	—	60
NP10-27	6WFCI17	13	17.5	1903	—	929	—	2832	142	143	145	39	—	68
NP10-28	6WFCI17	13	17.5	1963	—	929	—	2892	142	143	145	41	—	68
NP10-29	6WFCI17	13	17.5	2024	—	929	—	2953	142	143	145	42	—	68
NP10-30	6WFCI17	13	17.5	2084	—	929	—	3013	142	143	145	43	—	68
NP10-31	6WFCI17	13	17.5	2145	—	929	—	3074	142	143	145	44	—	68
NP10-32	6WFTCI20	15	20	2205	—	1013	—	3218	142	143	145	46	—	71
NP10-33	6WFTCI20	15	20	2266	—	1013	—	3279	142	143	145	47	—	71
NP10-34	6WFTCI20	15	20	2326	—	1053	—	3379	142	143	145	48	—	71
NP10-35	6WFTCI20	15	20	2387	—	1053	—	3440	142	143	145	49	—	71
NP10-36	6WFTCI20	15	20	2447	—	1053	—	3500	142	143	145	50	—	71
NP10-37	6WFTCI25	18.5	25	2508	—	1053	—	3558	142	143	145	52	—	76
NP10-36	6WFTCI25	18.5	25	2568	—	1053	—	3621	142	143	145	53	—	76
NP10-39	6WFTCI25	18.5	25	2629	—	1053	—	3682	142	143	145	54	—	76
NP10-40	6WFTCI25	18.5	25	2689	—	1053	—	3732	142	143	145	55	—	76
NP10-41	6WFTCI25	18.5	25	3018	—	1153	—	4171	142	143	145	57	—	76
NP10-42	6WFTCI25	18.5	25	3078	—	1153	—	4231	142	143	145	58	—	76
NP10-43	6WFTCI25	18.5	25	3138	—	1153	—	4191	142	143	145	59	—	76
NP10-44	6WFTCI25	18.5	25	3202	—	1153	—	4355	142	143	145	61	—	76

*Maximum Diameter of Pump With One Motor Cable Guard
**Maximum Diameter of Pump With Two Motor Cable Guard

50/60 Hz

NIAGARA™
PUMPS THE SMART CHOICE

SS Submersible Pump

PERFORMANCE TABLE 50 Hz / 2880 RPM

NP-10	DISCHARGE (Q)											
	m 3/h		0	2	4	6	8	10	12	14	16	18
	l / min.		0	33	65	100	135	165	200	230	265	300
MODEL	MOTOR RATING		TOTAL HEAD IN (m)									
	KW	HP										
NP10-1	0.55	0.75	12	12	12	12	10	8	7	6	5	4
NP10-2	0.75	1	22	22	22	22	20	17	14	13	10	8
NP10-3	1.5	2	32	32	32	32	30	28	21	19	15	12
NP10-4	1.5	2	39	39	39	39	38	36	28	25	22	16
NP10-5	2.2	3	49	49	49	49	46	42	35	32	26	20
NP10-6	2.2	3	58	58	58	58	54	50	48	38	30	24
NP10-7	3	4	69	69	69	69	66	58	55	44	35	28
NP10-8	3	4	78	78	78	78	76	70	60	51	40	32
NP10-9	4	5.5	84	84	84	84	83	78	68	57	46	36
NP10-10	4	5.5	98	98	98	98	94	86	76	63	51	40
NP10-11	4	5.5	105	105	105	105	102	96	84	70	56	44
NP10-12	4	5.5	118	118	118	118	114	102	90	76	61	48
NP10-13	5.5	7.5	127	127	127	127	120	110	98	82	66	52
NP10-14	5.5	7.5	137	137	137	137	134	120	106	89	71	56
NP10-15	5.5	7.5	147	147	147	147	144	126	115	95	76	60
NP10-16	7.5	10	156	157	157	157	151	134	121	101	81	64
NP10-17	7.5	10	167	167	167	167	158	140	129	108	86	68
NP10-18	7.5	10	177	177	177	177	166	148	136	114	90	72
NP10-19	9.3	12.5	186	186	186	186	172	158	144	120	95	76
NP10-20	9.3	12.5	196	196	196	196	180	166	151	127	100	80
NP10-21	9.3	12.5	206	206	206	206	195	178	159	133	105	84
NP10-22	9.3	12.5	216	216	216	216	202	185	167	139	110	88
NP10-23	9.3	12.5	225	224	224	224	210	190	174	146	121	92
NP10-24	9.3	12.5	234	234	234	234	220	200	182	152	127	96
NP10-25	9.3	12.5	245	244	244	244	230	208	189	158	132	100
NP10-26	11	15	255	255	255	255	239	216	197	165	138	104
NP10-27	11	15	263	263	263	263	246	225	204	171	142	108
NP10-28	11	15	273	273	273	273	256	233	212	177	148	112
NP10-29	11	15	285	285	285	285	265	242	220	184	152	116
NP10-30	11	15	295	295	295	295	273	250	227	190	159	120
NP10-31	13	17.5	306	305	305	305	282	258	235	196	165	124
NP10-32	15	20	315	315	315	315	290	267	242	203	170	128
NP10-33	15	20	325	325	325	325	300	276	250	209	175	132
NP10-34	15	20	335	335	335	335	310	284	257	215	180	136
NP10-35	15	20	343	343	343	343	320	292	265	222	186	140
NP10-36	15	20	353	352	352	352	330	300	273	228	192	144
NP10-37	15	20	362	362	362	362	340	309	280	234	198	148
NP10-38	15	20	372	372	372	372	348	318	288	241	204	152
NP10-39	15	20	381	381	381	381	357	325	295	247	208	156
NP10-40	15	20	391	391	391	391	366	332	303	253	212	160
NP10-41	18.5	25	400	400	400	400	372	342	310	260	218	164
NP10-42	18.5	25	411	410	410	410	382	350	318	266	224	168
NP10-43	18.5	25	421	420	420	420	392	360	326	272	230	172
NP10-44	18.5	25	431	430	430	430	401	368	333	279	235	176

SS Submersible Pump

NP 10 SERIES
PERFORMANCE CURVE

10 m³/h

50 Hz / 2880 RPM

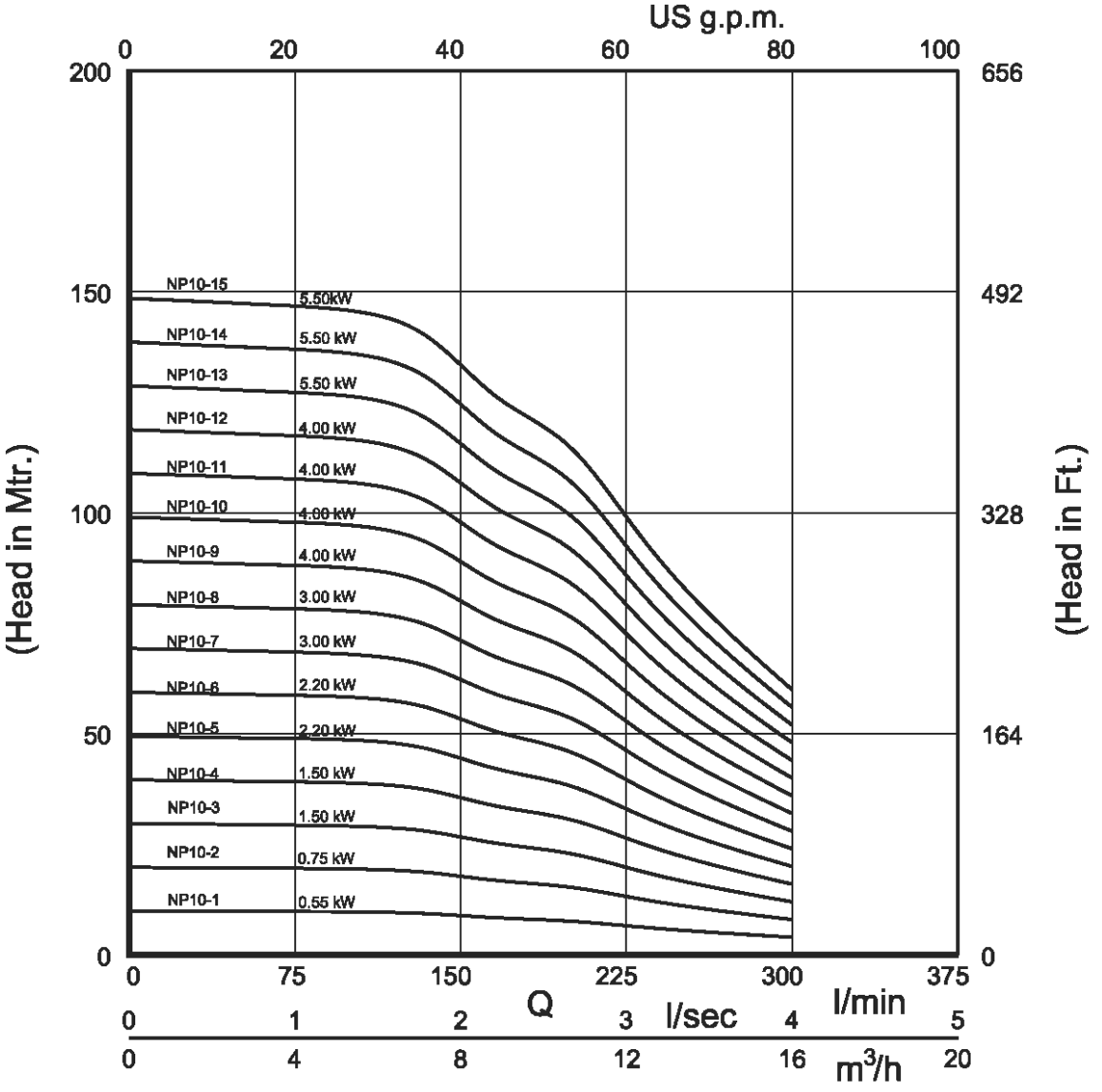

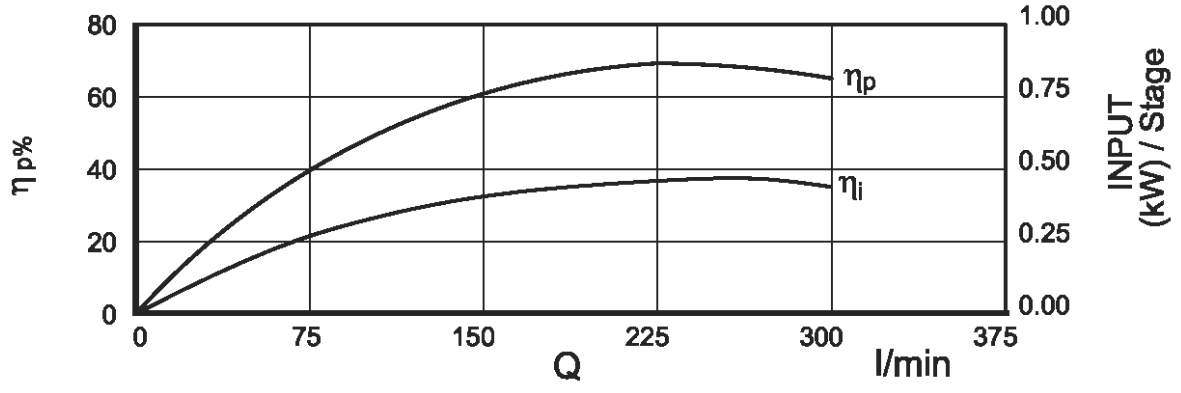

SS Submersible Pump

NP 10 SERIES
PERFORMANCE CURVE

10 m³/h

50 Hz / 2880 RPM

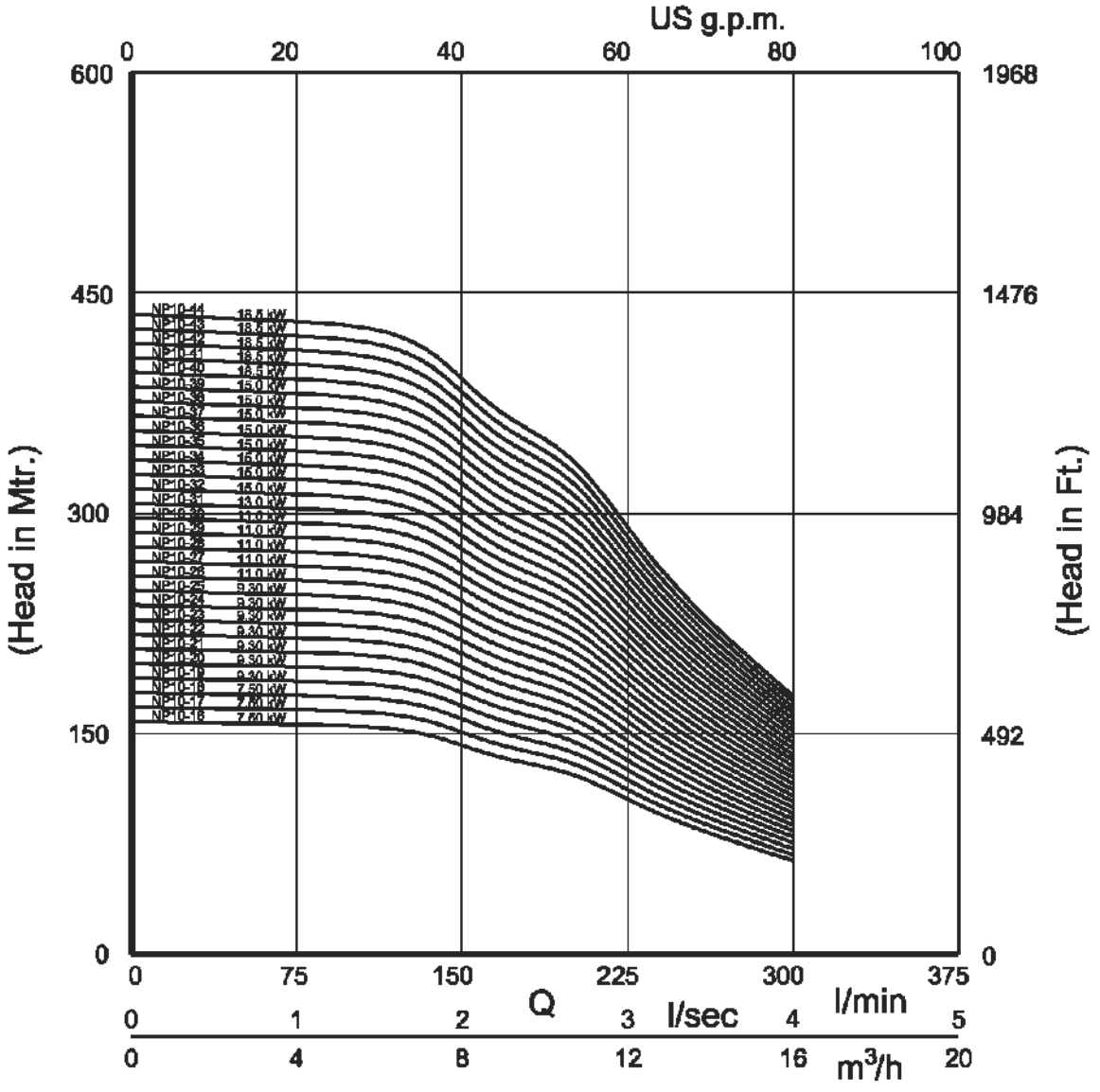

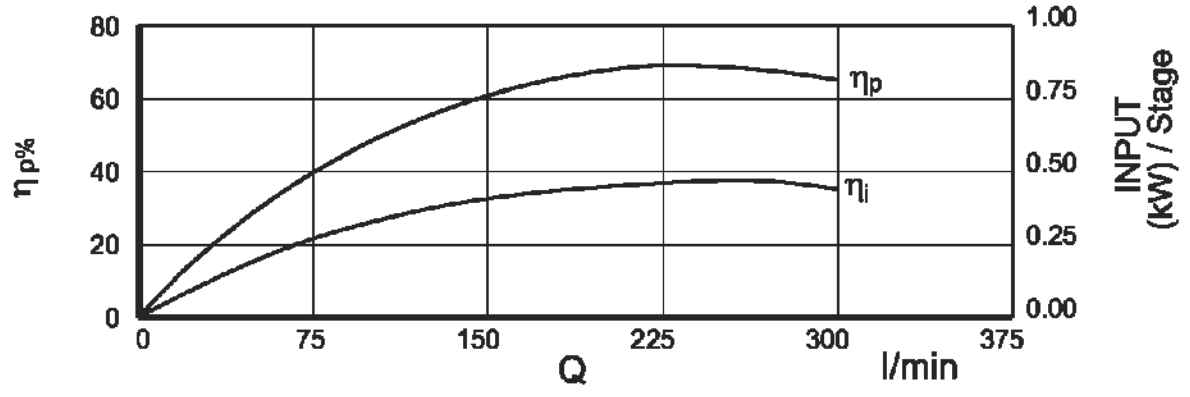

SS Submersible Pump

Technical Data NP - 12

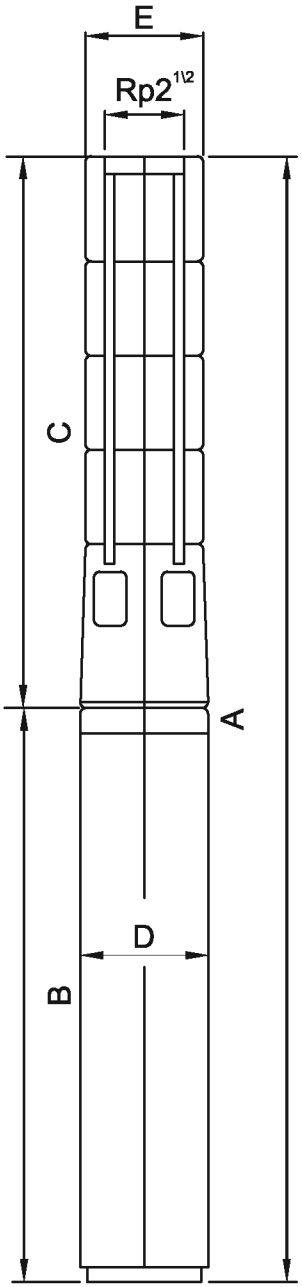

PUMP TYPE	MOTOR TYPE	MOTOR RATING		C	DIMENSION IN mm				D	E*	E**	Net Weight (Kg)		
					B		A					Pump	Motor	
		KW	HP		1 x 230 V	3 X 400V	1 X 230 V	3 X 400 V					1 x 230 V	3 X 400 V
NP12-1	4WF75	.55	.75	314	450	—	784	—	95	131	—	7	9	—
NP12-2	4WF15	1.1	1.5	374	500	—	874	—	95	131	—	9	10	—
NP12-3	4WF20	1.5	2	435	535	—	970	—	95	131	—	10	14	—
NP12-4	4WFSS30	2.2	3	495	—	678	—	1173	95	131	—	11	—	23
NP12-5	4WFSS30	2.2	3	556	—	678	—	1234	95	131	—	12	—	23
NP12-6	4WFSS40	3	4	616	—	718	—	1334	95	131	—	14	—	27
NP12-7	4WFSS40	3	4	677	—	718	—	1395	95	131	—	15	—	27
NP12-8	4WFSS55	4	5.5	737	—	778	—	1515	95	131	—	16	—	34
NP12-9	4WFSS55	4	5.5	798	—	778	—	1576	95	131	—	17	—	34
NP12-10	4WFSS75	5.5	7.5	858	—	918	—	1776	95	131	—	18	—	39
NP12-11	4WFSS75	5.5	7.5	919	—	918	—	1837	95	131	—	20	—	39
NP12-12	4WFSS75	5.5	7.5	979	—	918	—	1897	95	131	—	21	—	39
NP12-13	4WFSS10	7.5	10	1040	—	1058	—	2098	95	131	—	22	—	51
NP12-14	4WFSS10	7.5	10	1116	—	1058	—	2174	95	131	—	23	—	51
NP12-15	4WFSS10	7.5	10	1177	—	1058	—	2235	95	131	—	25	—	51
NP12-16	4WFSS10	7.5	10	1237	—	1058	—	2295	95	131	—	26	—	51
NP12-11	6WFCI75	5.5	7.5	919	—	729	—	1648	142	143	145	20	—	48
NP12-12	6WFCI75	5.5	7.5	979	—	729	—	1708	142	143	145	21	—	48
NP12-13	6WFCI10	7.5	10	1040	—	759	—	1799	142	143	145	22	—	51
NP12-14	6WFCI10	7.5	10	1116	—	759	—	1875	142	143	145	23	—	51
NP12-15	6WFCI10	7.5	10	1177	—	759	—	1936	142	143	145	25	—	51
NP12-16	6WFCI10	7.5	10	1237	—	759	—	1996	142	143	145	26	—	51
NP12-17	6WFCI12	9.3	12.5	1298	—	829	—	2127	142	143	145	27	—	53
NP12-18	6WFCI12	9.3	12.5	1358	—	829	—	2187	142	143	145	28	—	53
NP12-19	6WFCI12	9.3	12.5	1419	—	829	—	2248	142	143	145	30	—	53
NP12-20	6WFCI12	9.3	12.5	1479	—	829	—	2309	142	143	145	31	—	53
NP12-21	6WFCI15	11	15	1540	—	849	—	2389	142	143	145	32	—	60
NP12-22	6WFCI15	11	15	1600	—	849	—	2449	142	143	145	33	—	60
NP12-23	6WFCI15	11	15	1661	—	849	—	2510	142	143	145	34	—	60
NP12-24	6WFCI15	11	15	1721	—	849	—	2570	142	143	145	36	—	60
NP12-25	6WFCI17	13	17.5	1782	—	929	—	2711	142	143	145	37	—	68
NP12-26	6WFCI17	13	17.5	1842	—	929	—	2771	142	143	145	38	—	68
NP12-27	6WFCI17	13	17.5	1903	—	929	—	2832	142	143	145	39	—	68
NP12-28	6WFCI17	13	17.5	1963	—	929	—	2892	142	143	145	41	—	68
NP12-29	6WFTCI20	15	20	2024	—	983	—	3007	142	143	145	42	—	71
NP12-30	8WFTCI20	15	20	2084	—	983	—	3067	142	143	145	43	—	71
NP12-31	6WFTCI20	15	20	2145	—	983	—	3128	142	143	145	44	—	71
NP12-32	6WFTCI20	15	20	2205	—	983	—	3188	142	143	145	46	—	71
NP12-33	8WFTCI20	15	20	2266	—	983	—	3249	142	143	145	47	—	71
NP12-34	6WFTCI25	18.5	25	2326	—	1013	—	3339	142	143	145	48	—	76
NP12-35	8WFTCI25	18.5	25	2387	—	1013	—	3400	142	143	145	49	—	76
NP12-36	6WFTCI25	18.5	25	2447	—	1013	—	3460	142	143	145	50	—	76
NP12-37	8WFTCI25	18.5	25	2508	—	1013	—	3521	142	143	145	52	—	76
NP12-38	6WFTCI25	18.5	25	2568	—	1013	—	3681	142	143	145	53	—	76
NP12-39	8WFTCI25	18.5	25	2629	—	1013	—	3642	142	143	145	54	—	76
NP12-40	6WFTCI25	18.5	25	2689	—	1013	—	3702	142	143	145	55	—	76
NP12-41	6WFTCI30	22.4	30	3018	—	1053	—	4071	142	143	145	57	—	79
NP12-42	6WFTCI30	22.4	30	3078	—	1053	—	4131	142	143	145	58	—	79
NP12-43	6WFTCI30	22.4	30	3138	—	1053	—	4191	142	143	145	59	—	79
NP12-44	8WFTCI30	22.4	30	3202	—	1053	—	4255	142	143	145	61	—	79

*Maximum Diameter of Pump With One Motor Cable Guard
**Maximum Diameter of Pump With Two Motor Cable Guard

SS Submersible Pump

PERFORMANCE TABLE 50 Hz / 2880 RPM

NP-12			DISCHARGE (Q)									
	m 3/h		0	2	4	6	8	10	12	14	16	18
	l / min.		0	33	65	100	135	165	200	230	265	300
MODEL	MOTOR RATING		TOTAL HEAD IN (m)									
	KW	HP										
NP12-1	0.55	0.75	11	10	10	10	10	10	9	8	6	6
NP12-2	1.1	1.5	21	20	20	20	19	18	17	15	13	12
NP12-3	1.5	2	32	31	30	30	29	27	26	23	19	18
NP12-4	2.2	3	42	41	40	40	38	36	34	30	26	24
NP12-5	2.2	3	52	51	50	50	48	45	43	38	33	30
NP12-6	3	4	63	61	60	60	57	54	51	45	39	36
NP12-7	3	4	73	71	70	70	67	63	60	53	46	42
NP12-9	4	5.5	95	92	90	90	86	72	77	68	58	54
NP12-10	4	5.5	105	102	100	100	95	81	85	75	65	60
NP12-11	4	5.5	116	112	110	110	105	90	94	83	72	66
NP12-12	4	5.5	126	122	120	120	114	99	102	90	78	72
NP12-13	5.5	7.5	137	133	130	130	124	108	111	98	85	78
NP12-14	7.5	10	147	143	140	140	133	117	119	105	92	84
NP12-15	7.5	10	158	153	150	150	143	126	128	113	98	90
NP12-16	7.5	10	168	163	160	160	152	135	136	120	104	96
NP12-17	7.5	10	179	173	170	170	162	144	145	128	111	102
NP12-18	7.5	10	189	184	180	180	171	153	153	135	118	108
NP12-19	9.3	12.5	200	194	190	190	181	162	162	143	124	114
NP12-20	9.3	12.5	210	204	200	200	190	171	170	150	131	120
NP12-21	9.3	12.5	221	214	210	210	200	180	179	158	136	126
NP12-22	11	15	231	224	220	220	209	189	187	165	142	132
NP12-23	11	15	242	235	230	230	219	198	196	173	150	138
NP12-24	11	15	252	245	240	240	228	207	204	180	158	144
NP12-25	11	15	263	255	250	250	238	216	213	188	163	150
NP12-26	11	15	273	265	260	260	247	225	221	195	170	156
NP12-27	11	15	284	275	270	270	257	234	230	203	177	162
NP12-28	13	17.5	294	286	280	280	266	243	238	210	183	168
NP12-29	13	17.5	305	296	290	290	276	252	247	216	190	174
NP12-30	15	20	315	306	300	300	285	261	255	225	196	180
NP12-31	15	20	326	316	310	310	295	270	264	233	202	186
NP12-32	15	20	336	326	320	320	304	279	274	240	210	192
NP12-33	15	20	347	337	330	330	314	288	281	248	217	198
NP12-34	15	20	357	347	340	340	323	297	289	255	222	204
NP12-35	15	20	368	357	350	350	333	306	298	263	230	210
NP12-36	15	20	378	367	360	360	342	315	306	270	235	216
NP12-37	18.5	25	389	377	370	370	352	324	315	278	242	222
NP12-38	18.5	25	399	388	380	380	361	333	323	285	248	228
NP12-39	18.5	25	410	398	390	390	371	342	332	293	255	234
NP12-40	18.5	25	420	408	400	400	380	351	340	300	262	240
NP12-41	18.5	25	431	418	410	410	389	360	348	307	268	246
NP12-42	18.5	25	441	428	420	420	399	369	357	315	275	252
NP12-43	22.4	30	452	439	430	430	418	378	365	322	281	258
NP12-44	22.4	30	462	449	440	440	418	396	374	330	288	264

SS Submersible Pump

NP 12 SERIES
PERFORMANCE CURVE

12 m³/h

50 Hz / 2880 RPM

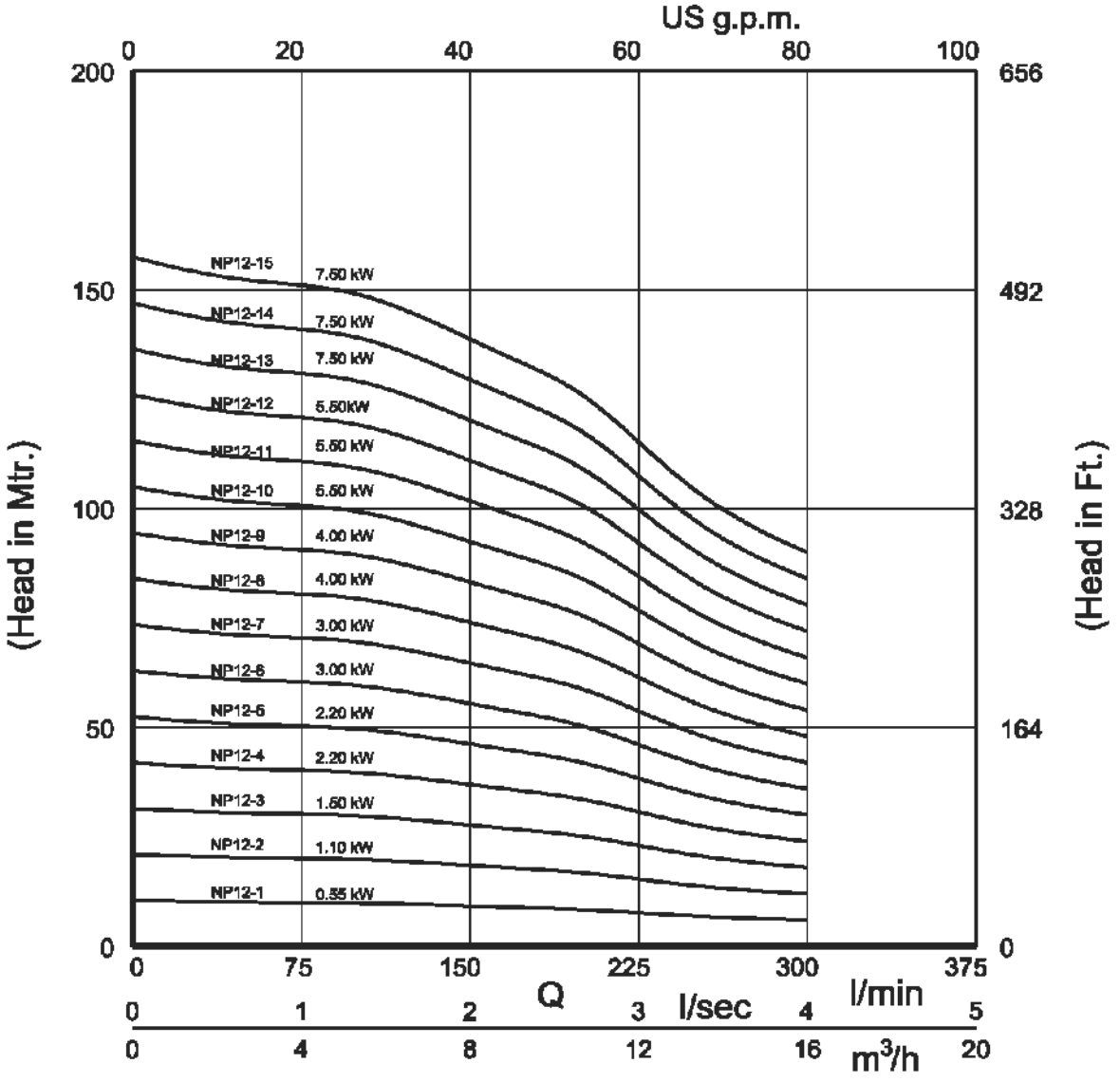

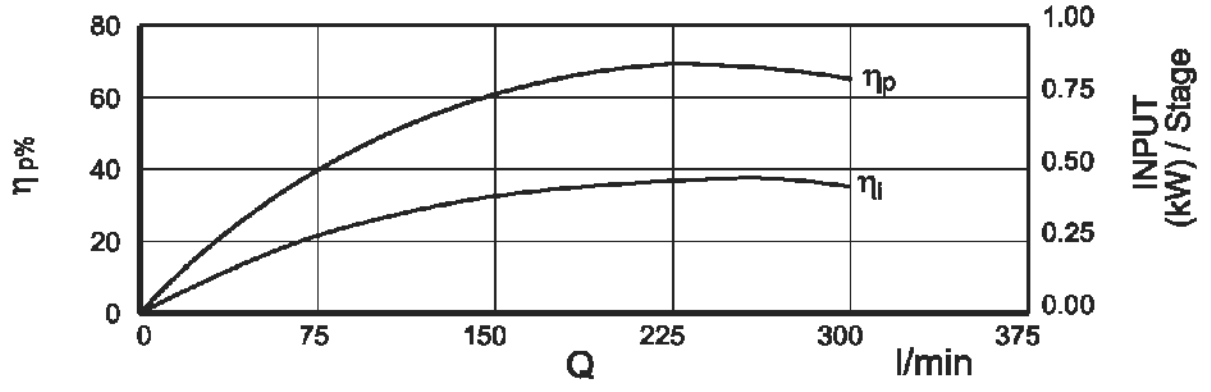

SS Submersible Pump

NP 12 SERIES
PERFORMANCE CURVE

12 m³/h

50 Hz / 2880 RPM

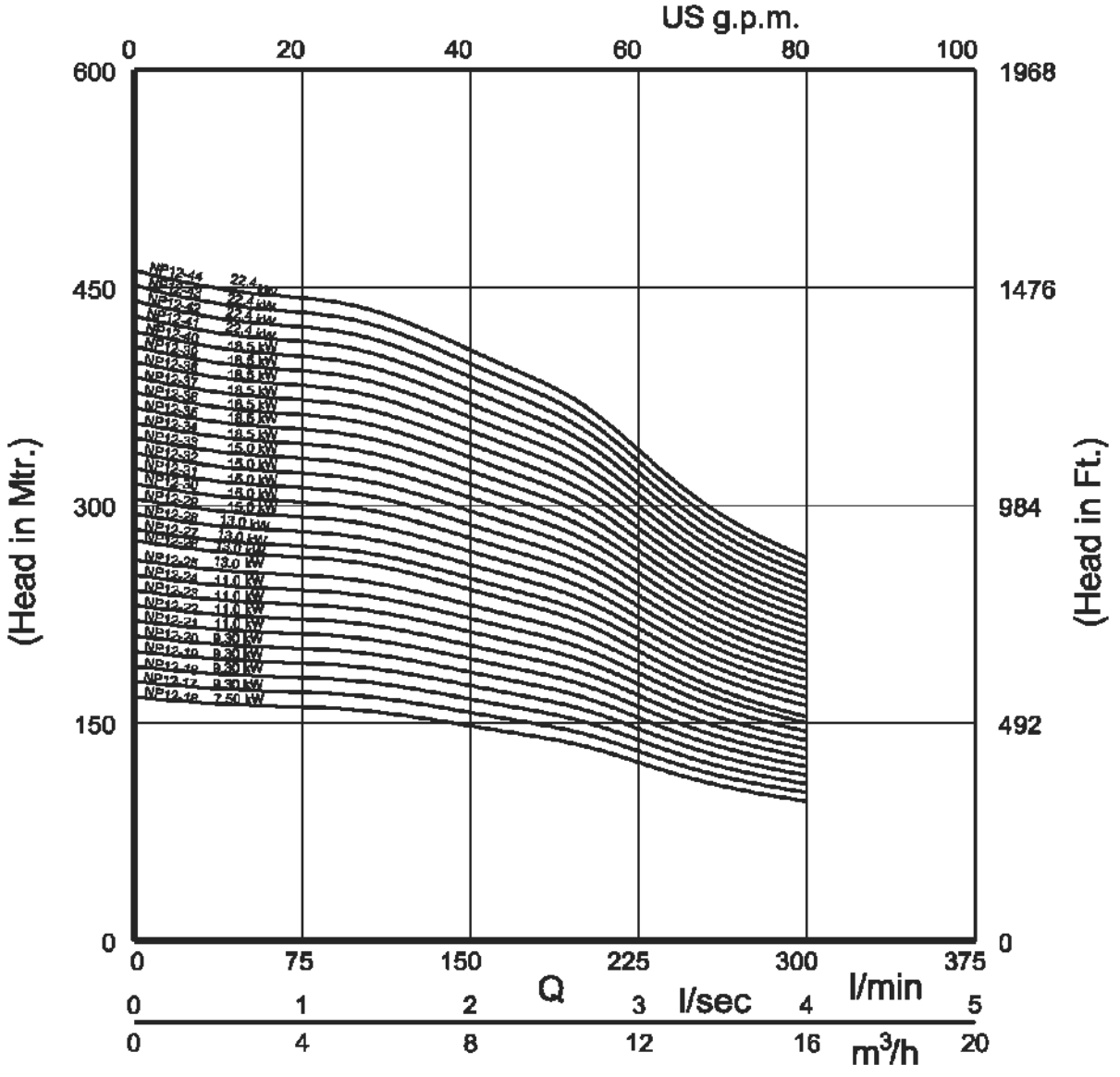

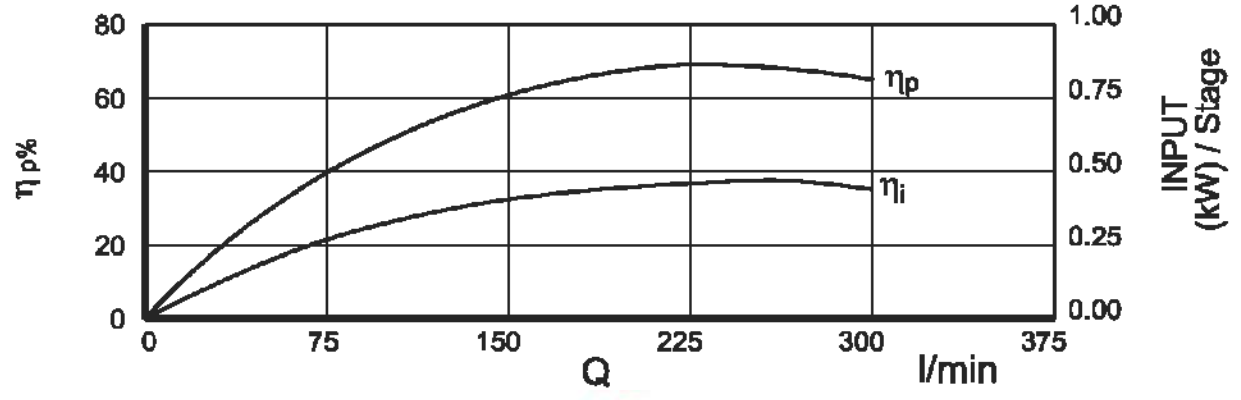

SS Submersible Pump

Technical Data NP - 17

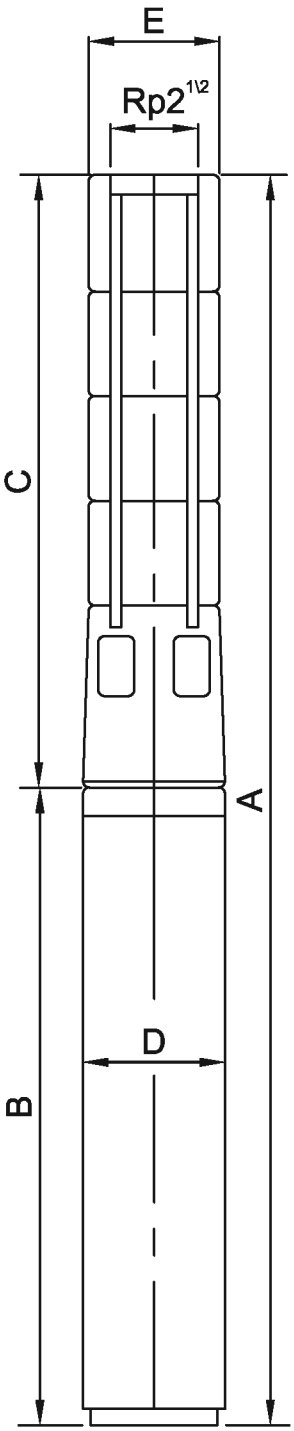

PUMP TYPE	MOTOR TYPE	MOTOR RATING		C	DIMENSION IN mm							Net Weight (Kg)		
					B		A		D	E*	E**	Pump	Motor	
		KW	HP		1 X 230V	3 X 400V	1 X 230V	3 X 400V					1 X 230V	3 X 400V
NP17-1	4WF75	.55	.75	318	455	—	773	—	95	131	—	7	10	—
NP17-2	4WF15	1.1	1.5	378	500	—	878		95	131	—	9	14	—
NP17-3	4WFSS30	2.2	3	439	718	678	1157	1117	95	131	—	10	16	23
NP17-4	4WFSS30	2.2	3	499	718	678	1217	1177	95	131	—	11	16	23
NP17-5	4WFSS40	3	4	560	—	718	—	1278	95	131	—	11	—	26
NP17-6	4WFSS55	4	5.5	620	—	778	—	1398	95	131	—	12	—	27
NP17-7	4WFSS55	4	5.5	681	—	778	—	1459	95	131	—	12	—	27
NP17-8	6WFCI75	5.5	7.5	740	—	729	—	1469	142	143	145	16	—	48
NP17-9	6WFCI75	5.5	7.5	800	—	729	—	1529	142	143	145	17	—	48
NP17-10	6WFCI75	5.5	7.5	860	—	729	—	1589	142	143	145	18	—	48
NP17-11	6WFCI10	7.5	10	920	—	759	—	1680	142	143	145	20	—	51
NP17-12	6WFCI10	7.5	10	\98	—	759	—	1739	142	143	145	21	—	51
NP17-13	6WFCI10	7.5	10	1040	—	759	—	1799	142	143	145	22	—	51
NP17-14	6WFCI12	9.3	12.5	1100	—	829	—	1929	142	143	145	23	—	53
NP17-15	6WFCI12	9.3	12.5	1160	—	829	—	1989	142	143	145	25	—	53
NP17-16	6WFCI12	9.3	12.5	1220	—	829	—	2049	142	143	145	26	—	53
NP17-17	6WFCI12	9.3	12.5	1280	—	829	—	2109	142	143	145	27	—	53
NP17-18	6WFCI15	11	15	1340	—	849	—	2189	142	143	145	28	—	60
NP17-19	6WFCI15	11	15	1400	—	849	—	2249	142	143	145	30	—	60
NP17-20	6WFCI1	11	15	1460	—	849	—	2309	142	143	145	31	—	60
NP17-21	6WFCI1	13	17.5	1520	—	929	—	2449	142	143	145	32	—	68
NP17-22	6WFCI1	13	17.5	1580	—	929	—	2509	142	143	145	33	—	68
NP17-23	6WFCI17	13	17.5	1640	—	929	—	2569	142	143	145	34	—	68
NP17-24	6WFCI17	13	17.5	1700	—	929	—	2629	142	143	145	36	—	68
NP17-25	6WFTCI20	15	20	1760	—	983	—	2743	142	143	145	37	—	71
NP17-26	6WFTCI20	15	20	1820	—	983	—	2803	142	143	145	38	—	71
NP17-27	6WFTCI20	15	20	1940	—	983	—	2923	142	143	145	39	—	71
NP17-28	6WFTCI25	18.5	25	2000	—	1013	—	3013	142	143	145	41	—	76
NP17-29	6WFTCI25	18.5	25	2061	—	1013	—	3074	142	143	145	42	—	76
NP17-30	6WFTCI25	18.5	25	2122	—	1013	—	3135	142	143	145	43	—	76
NP17-31	6WFTCI25	18.5	25	2180	—	1013	—	3193	142	143	145	44	—	76
NP17-32	6WFTCI25	18.5	25	2242	—	1013	—	3237	142	143	145	46	—	76
NP17-33	6WFTCI25	18.5	25	2280	—	1013	—	3293	142	143	145	47	—	76
NP17-34	6WFTCI30	22.4	30	2340	—	1053	—	3393	142	143	145	48	—	79
NP17-35	6WFTCI30	22.4	30	2402	—	1053	—	3455	142	143	145	49	—	79
NP17-36	6WFTCI30	22.4	30	2460	—	1053	—	3513	142	143	145	50	—	79
NP17-37	6WFTCI30	22.4	30	2523	—	1053	—	3576	142	143	145	52	—	79
NP17-38	6WFTCI30	22.4	30	2580	—	1053	—	3633	142	143	145	53	—	79
NP17-39	6WFTCI30	22.4	30	2641	—	1053	—	3694	142	143	145	54	—	79
NP17-40	6WFTCI30	22.4	30	2821	—	1053	—	3874	142	143	145	55	—	79
NP17-43	6WFTCI35	26	35	2940	—	1153	—	4093	142	143	145	59	—	81
NP17-45	6WFTCI35	26	35	3120	—	1153	—	4273	142	143	145	62	—	81
NP17-48	6WFTCI35	26	35	3180	—	1153	—	4333	142	143	145	65	—	81

*Maximum Diameter of Pump With One Motor Cable Guard
**Maximum Diameter of Pump With Two Motor Cable Guard

SS Submersible Pump

PERFORMANCE TABLE 50 Hz / 2880 RPM

NP-17			DISCHARGE (Q)											
	m 3/h		0	2	4	6	8	10	12	14	16	18	20	22
	l / min.		0	33	65	100	135	165	200	230	265	300	335	365
MODEL	MOTOR RATING		TOTAL HEAD IN (m)											
	KW	HP												
NP17-1	0.55	0.75	12	11	10	11	10	10	9	8	7	6	5	4
NP17-2	1.1	1.5	22	22	21	22	20	21	20	18	17	15	13	10
NP17-3	2.2	3	34	33	34	33	33	31	29	27	25	22	19	15
NP17-4	2.2	3	45	44	44	45	44	42	39	37	34	30	26	21
NP17-5	4	5.5	56	55	56	55	54	51	49	45	41	37	31	25
NP17-6	4	5.5	67	66	67	66	65	63	59	55	50	45	38	31
NP17-7	4	5.5	78	78	78	77	75	72	68	64	58	52	44	35
NP17-8	5.5	7.5	89	89	89	88	86	82	78	73	66	59	51	40
NP17-9	5.5	7.5	101	101	100	99	97	94	89	83	76	67	58	46
NP17-10	5.5	7.5	112	111	111	110	108	104	99	92	84	75	64	51
NP17-11	7.5	10	124	124	123	122	119	115	110	102	94	84	72	58
NP17-12	7.5	10	135	135	134	133	130	125	120	112	103	92	79	63
NP17-13	7.5	10	145	145	144	143	140	135	128	119	109	97	83	66
NP17-14	9.3	12.5	156	156	155	154	151	145	138	129	118	104	89	72
NP17-15	9.3	12.5	168	168	167	165	162	156	149	139	127	113	97	78
NP17-16	9.3	12.5	179	179	178	178	173	167	159	148	136	121	104	83
NP17-17	9.3	12.5	189	189	188	186	182	175	166	155	141	126	107	86
NP17-18	11	15	201	200	199	198	194	187	177	165	151	134	115	92
NP17-19	11	15	212	212	211	209	204	197	187	175	160	142	121	97
NP17-20	11	15	223	223	222	220	215	207	196	184	168	149	127	102
NP17-21	13	17.5	235	234	234	232	227	220	209	195	179	159	137	110
NP17-22	13	17.5	245	245	244	242	237	228	217	202	185	164	140	113
NP17-23	13	17.5	257	256	255	253	248	239	227	212	193	172	147	118
NP17-24	13	17.5	268	267	266	264	259	250	237	221	201	179	153	123
NP17-25	15	20	280	279	279	276	270	261	248	232	212	189	162	131
NP17-26	15	20	290	289	288	285	280	270	256	239	218	194	166	133
NP17-27	15	20	301	300	300	297	290	280	266	249	227	202	173	139
NP17-28	18.5	25	312	312	310	307	301	291	276	257	235	209	179	144
NP17-29	18.5	25	326	325	324	321	315	305	290	272	249	222	191	155
NP17-30	18.5	25	335	334	332	329	323	311	296	276	252	224	191	154
NP17-31	18.5	25	347	346	346	342	336	324	309	289	264	236	202	163
NP17-32	18.5	25	358	357	357	353	347	334	319	298	273	244	209	168
NP17-33	18.5	25	368	368	367	363	356	344	327	305	279	249	213	172
NP17-34	22.4	30	379	378	377	373	366	353	335	312	286	254	217	174
NP17-35	22.4	30	392	392	391	387	380	367	349	326	299	266	229	185
NP17-36	22.4	30	401	401	399	395	387	374	355	331	302	269	230	185
NP17-37	22.4	30	414	413	412	408	400	386	367	343	314	279	240	193
NP17-38	22.4	30	424	423	421	417	409	394	374	349	319	283	242	195
NP17-39	22.4	30	435	434	433	429	420	405	385	360	328	292	250	101
NP17-40	22.4	30	446	445	443	439	430	415	394	368	336	298	255	205
NP17-43	26	35	481	481	479	475	466	450	428	400	366	326	280	227
NP17-45	26	35	502	501	499	494	484	467	443	414	378	336	278	231
NP17-48	26	35	535	534	532	527	516	498	473	441	403	358	306	246

SS Submersible Pump

NP 17 SERIES

PERFORMANCE CURVE

17 m³/h

50 Hz / 2880 RPM

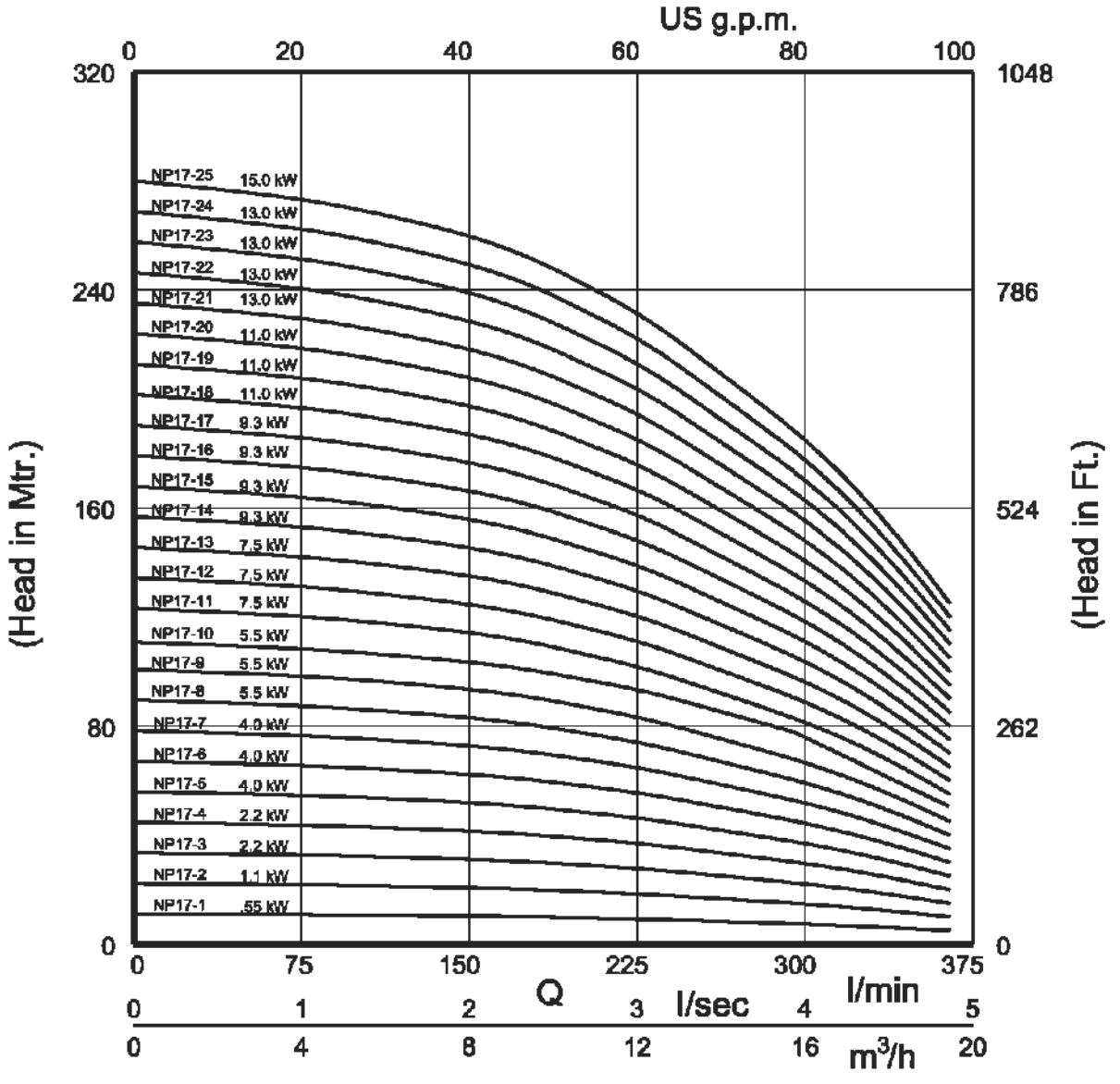

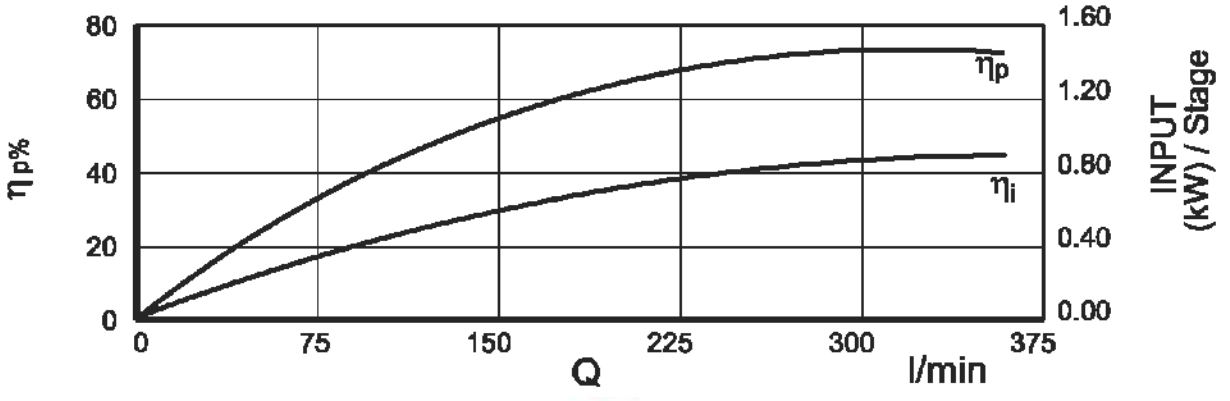

SS Submersible Pump

NP 17 SERIES

PERFORMANCE CURVE

17 m³/h

50 Hz / 2880 RPM

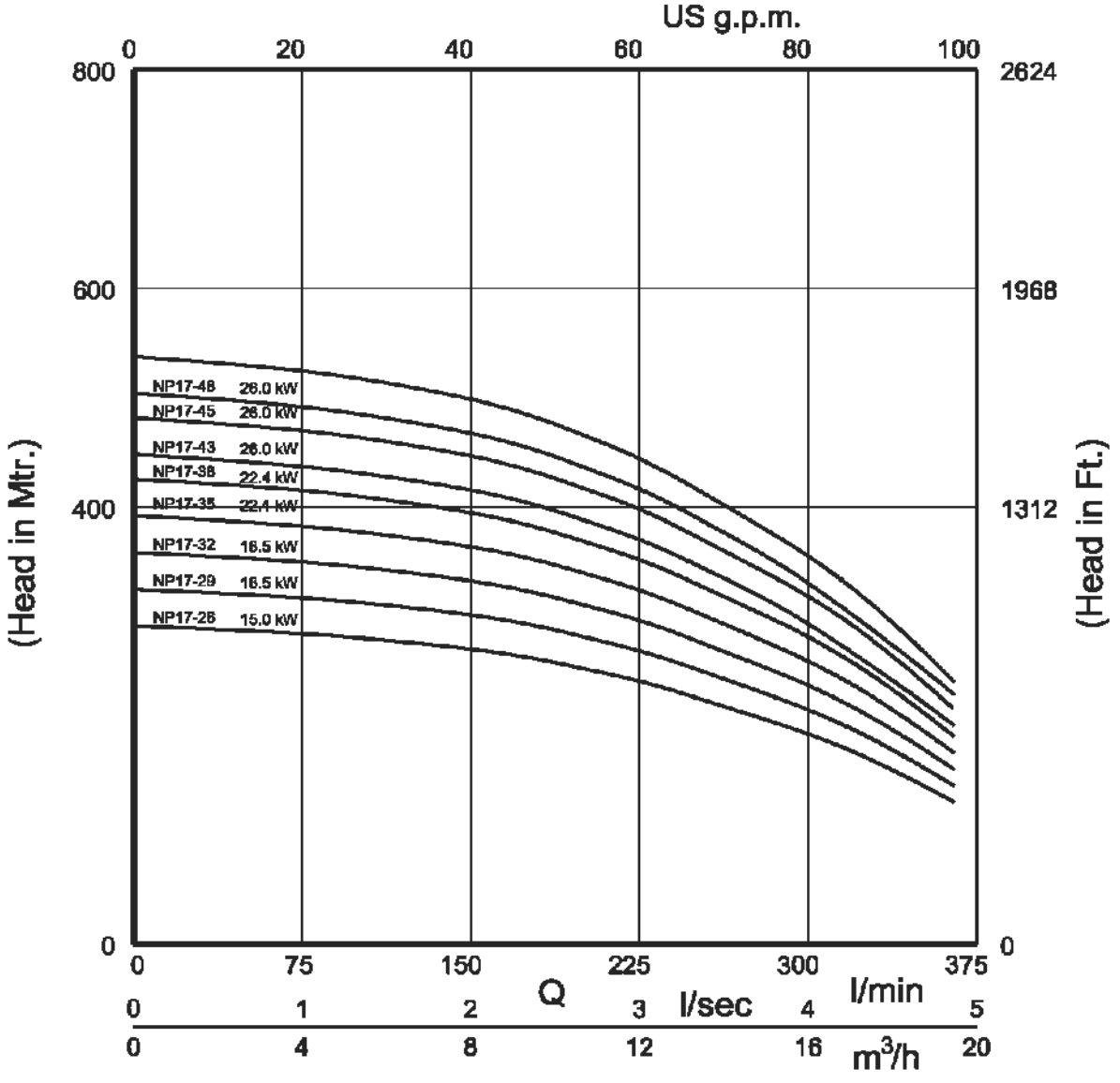

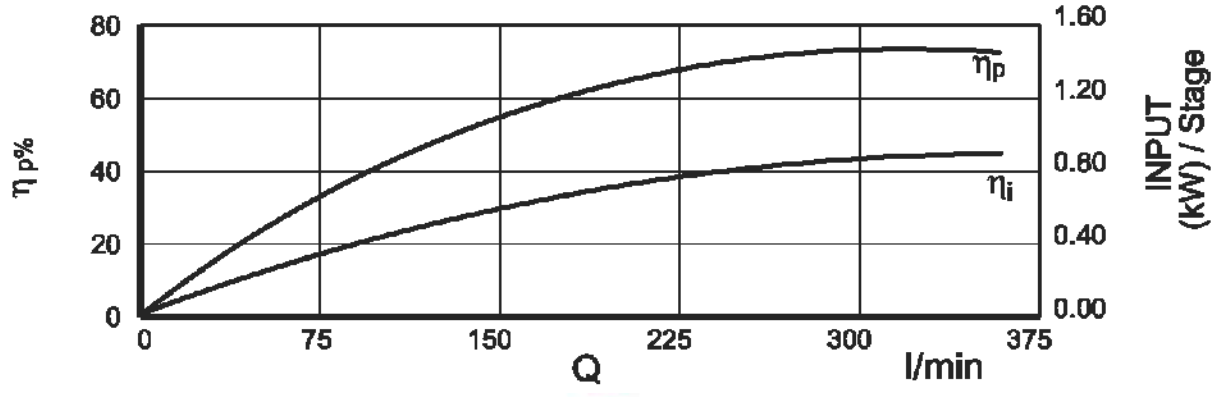

SECTIONAL VIEW NP-30

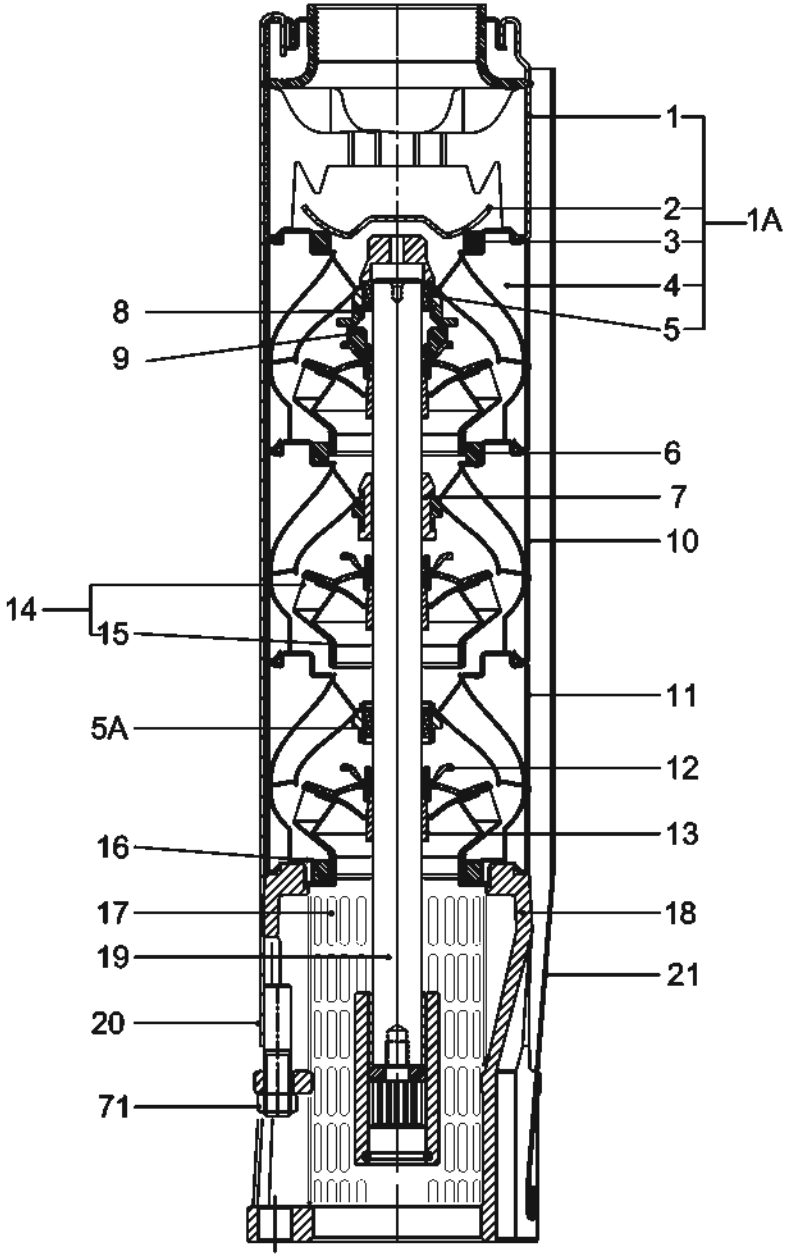

NP30-39 to NP30-54 Are Mounted
In Mounted Sleeve Rp 3" Connection

MATERIAL SPECIFICATION OF NP - 30

Part No.	Drawing No	Description	Material	Quantity / Pump
1	30 30 5501	Discharge Chamber	Stainless Steel	01
2	30 11 0000	Valve Cup	Stainless Steel	01
3	30 14 0000	Valve Seat	Stainless Steel + NBR	01
4	30 33 0001	Inter Mediate Chamber Top	Stainless Steel	01
5	30 36 0000	Upper Bearing	NBR	01
5A		Lower Bearing	NBR	01
	30 34 0000	Cap	Stainless Steel	02
6	30 37 0000	Neck Ring	NBR + PPS	N
7	30 41 0000	Bearing Bush Inter Mediate	NBR	N-2
8	30 31 0900	Stop Ring	Stainless Steel	01
9	30 39 0000	Spacing Washer	Carbon+Graphite Hy 22 In PTFE Mass	01
10	30 32 0001	Inter Mediate Chamber Stage	Stainless Steel	N-2
11	30 31 0001	Inter Mediate Chamber Bottom	Stainless Steel	01
12	30 23 0000	Collet Nut	Stainless Steel	N-1
13	30 22 0000	Collet	Stainless Steel	N
14	30 21 0001	Impeller	Stainless Steel	N
15	30 21 0500	Wear Ring	Stainless Steel	N
16	30 45 0000	Retainer	Stainless Steel	01
17	30 46 0000	Strainer	Stainless Steel	01
18	30 85 0000	Suction Inter Connector	Stainless Steel	01
19	30 52 0066	Pump Shaft	Stainless Steel	01
20	30 53 0066	Strap	Stainless Steel	04
21	30 54 0066	Cable Guard	Stainless Steel	01
71	30 71 0000	Hex Nut	Stainless Steel	04
99	30 99 0000	Name Plate	Stainless Steel	01
				N = No. Of Stage

NIAGARA PUMPS THE SMART CHOICE ™

SS Submersible Pump

SS Submersible Pump

Technical Data NP - 30

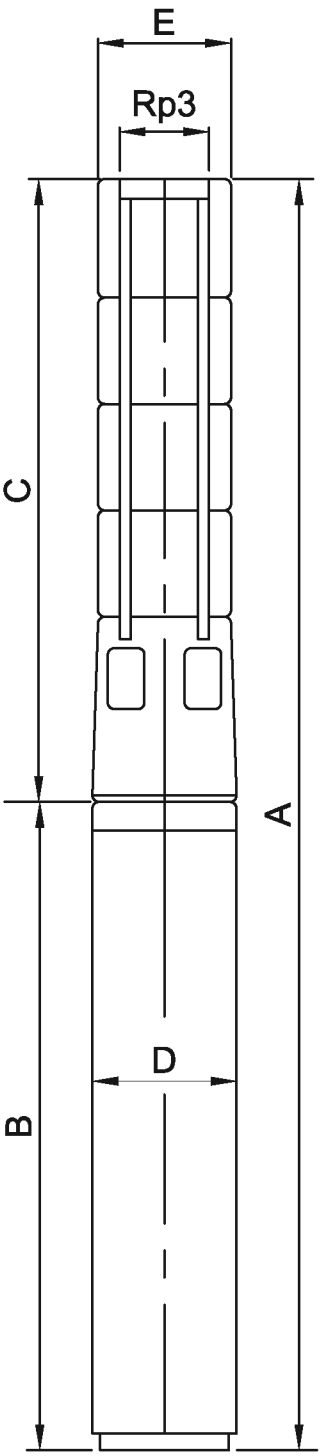

PUMP TYPE	MOTOR TYPE	MOTOR RATING		C	DIMENSION IN mm							Net Weight (Kg)		
					B		A		D	E*	E**	Pump	Motor	
		KW	HP		1 X 230V	3 X 400V	1 X 230V	3 X 400V					1 X 230V	3 X 400V
NP30-1	4WF15	1.1	1.5	350	483	—	833	—	95	131	—	6	14	—
NP30-2	4WFSS30	2.2	3	446	718	678	1164	1124	95	131	—	8	16	23
NP30-3	4WFSS40	3	4	542	—	718	—	1260	95	131	—	10	—	26
NP30-4	4WFSS55	4	5.5	638	—	778	—	1416	95	131	—	11	—	27
NP30-5	4WFSS75	5.5	7.5	734	—	918	—	1652	95	131	—	13	—	34
NP30-6	4WFSS75	5.5	7.5	830	—	918	—	1748	95	131	—	15	—	34
NP30-7	4WFSS10	7.5	10	926	—	1058	—	1984	95	131	—	17	—	39
NP30-8	4WFSS10	7.5	10	1022	—	1058	—	2080	95	131	—	18	—	39
NP30-5	6WFCI75	5.5	7.5	754	—	729	—	1483	142	143	145	15	—	48
NP30-6	6WFCI75	5.5	7.5	850	—	729	—	1579	142	143	145	16	—	48
NP30-7	6WFCI10	7.5	10	946	—	759	—	1705	142	143	145	18	—	51
NP30-8	6WFCI10	7.5	10	1042	—	759	—	1801	142	143	145	20	—	51
NP30-9	6WFCI12	9.3	12	1138	—	829	—	1967	142	143	145	21	—	53
NP30-10	6WFCI12	9.3	12	1234	—	829	—	2063	142	143	145	23	—	53
NP30-11	6WFCI12	9.3	12	1330	—	829	—	2159	142	143	145	25	—	53
NP30-12	6WFCI15	11	15	1426	—	849	—	2275	142	143	145	26	—	60
NP30-13	6WFCI15	11	15	1522	—	849	—	2371	142	143	145	28	—	60
NP30-14	6WFCI17	13	17.5	1618	—	929	—	2547	142	143	145	30	—	68
NP30-15	6WFCI17	13	17.5	1714	—	929	—	2643	142	143	145	32	—	68
NP30-16	6WFTCI20	15	20	1810	—	983	—	2793	142	143	145	33	—	71
NP30-17	6WFTCI20	15	20	1906	—	983	—	2889	142	143	145	35	—	71
NP30-18	6WFTCI25	18.5	25	2002	—	1013	—	3015	142	143	145	37	—	76
NP30-19	6WFTCI25	18.5	25	2098	—	1013	—	3111	142	143	145	38	—	76
NP30-20	6WFTCI25	18.5	25	2194	—	1013	—	3207	142	143	145	40	—	76
NP30-21	6WFTCI25	18.5	25	2290	—	1013	—	3303	142	143	145	42	—	76
NP30-22	6WFTCI30	22.4	30	2386	—	1053	—	3439	142	143	145	43	—	79
NP30-23	6WFTCI30	22.4	30	2482	—	1053	—	3535	142	143	145	45	—	79
NP30-24	6WFTCI30	22.4	30	2578	—	1053	—	3631	142	143	145	47	—	79
NP30-25	6WFTCI30	22.4	30	2674	—	1053	—	3727	142	143	145	49	—	79
NP30-26	6WFTCI30	22.4	30	2770	—	1053	—	3823	142	143	145	50	—	79
NP30-27	6WFTCI35	26	35	2866	—	1153	—	4019	142	143	145	52	—	81
NP30-28	6WFTCI35	26	35	2962	—	1153	—	4115	142	143	145	54	—	81
NP30-29	6WFTCI35	26	35	3058	—	1153	—	4211	142	143	145	55	—	81
NP30-30	6WFTCI35	26	35	3154	—	1153	—	4307	142	143	145	57	—	81
NP30-31	6WFTCI40	30	40	3250	—	1223	—	4473	142	143	145	59	—	84
NP30-32	6WFTCI40	30	40	3346	—	1223	—	4569	142	143	145	60	—	84
NP30-33	6WFTCI40	30	40	3442	—	1223	—	4665	142	143	145	62	—	84
NP30-34	6WFTCI40	30	40	3538	—	1223	—	4761	142	143	145	64	—	84
NP30-35	6WFTCI40	30	40	3634	—	1223	—	4857	142	143	145	66	—	84
NP30-39	6WFTCI50	37	50	4086	—	1333	—	5401	142	143	145	78	—	94
NP30-43	6WFTCI50	37	50	4452	—	1333	—	5785	142	143	145	85	—	94
NP30-46	6WFTCI60	45	60	4740	—	1403	—	6143	142	143	145	90	—	100
NP30-49	6WFTCI60	45	60	5028	—	1403	—	6431	142	143	145	95	—	100

*Maximum Diameter of Pump With One Motor Cable Guard
**Maximum Diameter of Pump With Two Motor Cable Guard

PERFORMANCE TABLE 50 Hz / 2880 RPM

NP-30			DISCHARGE (Q)								
		m³/h	0	4.2	10.8	15.0	20.2	24.0	27.9	31.8	39.9
		l/min	0	70	180	250	336	400	465	530	665
MODEL	MOTOR RATING		TOTAL HEAD IN (m)								
	kW	HP									
NP 30-1	1.10	1.50	12	12	11	11	10	9	9	8	5
NP 30-2	2.20	3.00	24	23	22	21	20	19	17	15	10
NP 30-3	3.00	4.00	35	35	33	32	30	28	26	23	14
NP 30-4	4.00	5.50	47	46	44	42	40	38	34	30	19
NP 30-5	5.50	7.50	59	58	55	53	50	47	43	38	24
NP 30-6	5.50	7.50	71	70	66	64	60	56	52	46	29
NP 30-7	7.50	10.00	83	81	77	74	70	66	60	53	34
NP 30-8	7.50	10.00	94	93	88	85	80	75	69	61	38
NP 30-9	9.30	12.50	106	104	99	95	90	85	77	68	43
NP 30-10	9.30	12.50	118	116	110	106	100	94	86	76	48
NP 30-11	9.30	12.50	130	128	121	117	110	103	95	84	53
NP 30-12	11.00	15.00	142	139	132	127	120	113	103	91	58
NP 30-13	11.00	15.00	153	151	143	138	130	122	112	99	62
NP 30-14	13.00	17.50	165	162	154	148	140	132	120	106	67
NP 30-15	13.00	17.50	177	174	165	159	150	141	129	114	72
NP 30-16	15.00	20.00	189	186	176	170	160	150	138	122	77
NP 30-17	15.00	20.00	201	197	187	180	170	160	146	129	82
NP 30-18	18.50	25.00	212	209	198	191	180	169	155	137	86
NP 30-19	18.50	25.00	224	220	209	201	190	179	163	144	91
NP 30-20	18.50	25.00	236	232	220	212	200	188	172	152	96
NP 30-21	18.50	25.00	248	244	231	223	210	197	181	160	101
NP 30-22	22.40	30.00	260	255	242	233	220	207	189	167	106
NP 30-23	22.40	30.00	271	267	253	244	230	216	198	175	110
NP 30-24	22.40	30.00	283	278	264	254	240	226	206	182	115
NP 30-25	22.40	30.00	295	290	275	265	250	235	215	190	120
NP 30-26	22.40	30.00	307	302	286	276	260	244	224	198	125
NP 30-27	26.00	35.00	319	313	297	286	270	254	232	205	130
NP 30-28	26.00	35.00	330	325	308	297	280	263	241	213	134
NP 30-29	26.00	35.00	342	336	319	307	290	273	249	220	139
NP 30-30	26.00	35.00	354	348	330	318	300	282	258	228	144
NP 30-31	26.00	35.00	366	360	341	329	310	291	267	236	149
NP 30-32	30.00	40.00	378	371	352	339	320	301	275	243	154
NP 30-33	30.00	40.00	389	383	363	350	330	310	284	251	158
NP 30-34	30.00	40.00	401	394	374	360	340	320	292	258	163
NP 30-35	30.00	40.00	413	406	385	371	350	329	301	266	168
NP 30-39	37.00	50.00	460	452	429	413	390	367	335	296	187
NP 30-43	37.00	50.00	507	499	473	456	430	404	370	327	206
NP 30-46	45.00	60.00	543	534	506	488	460	432	396	350	221
NP 30-49	45.00	60.00	578	568	539	519	490	461	421	372	235

SS Submersible Pump

NP 30 SERIES

PERFORMANCE CURVE

30 m³/h

50 Hz / 2880 RPM

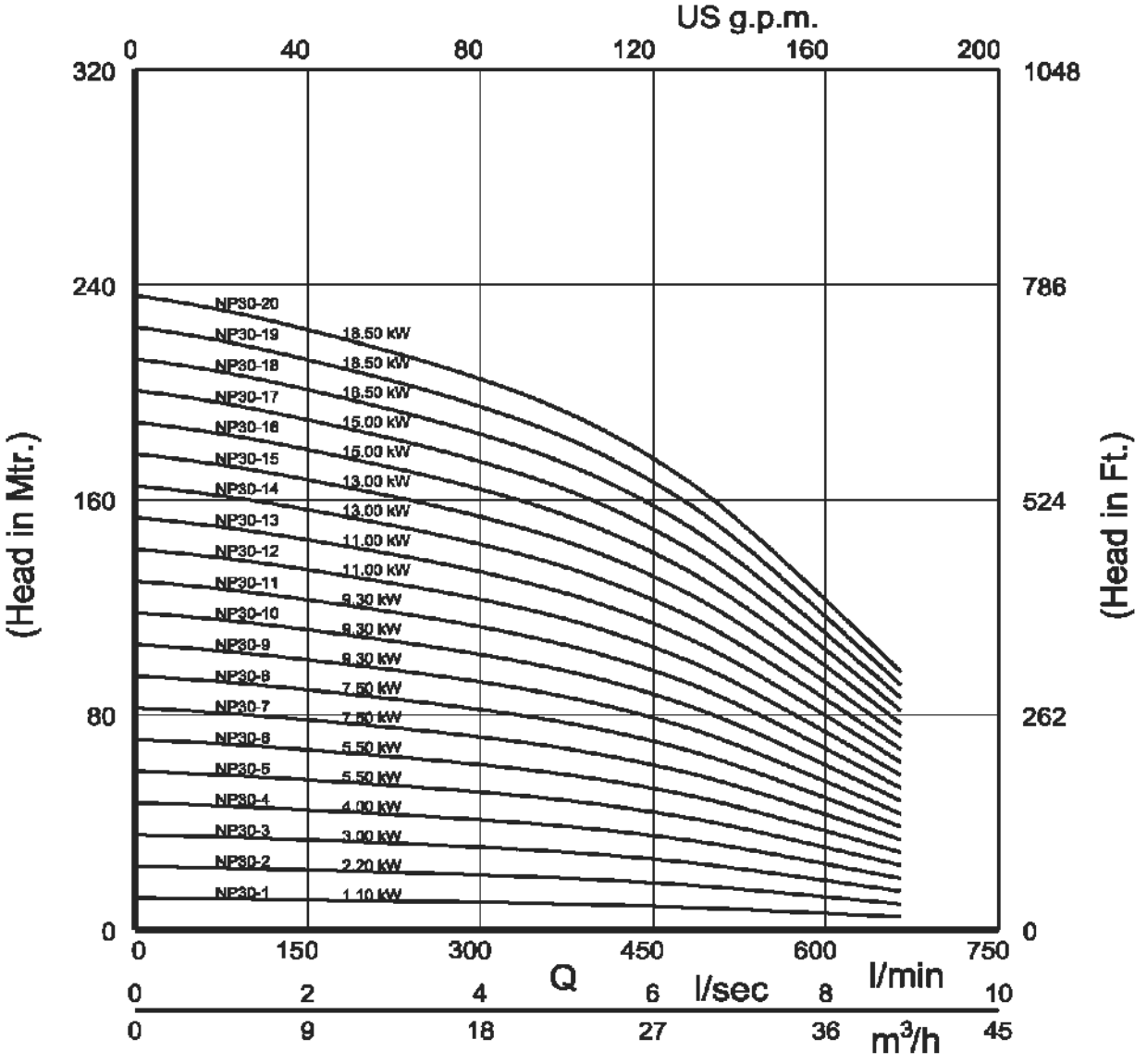

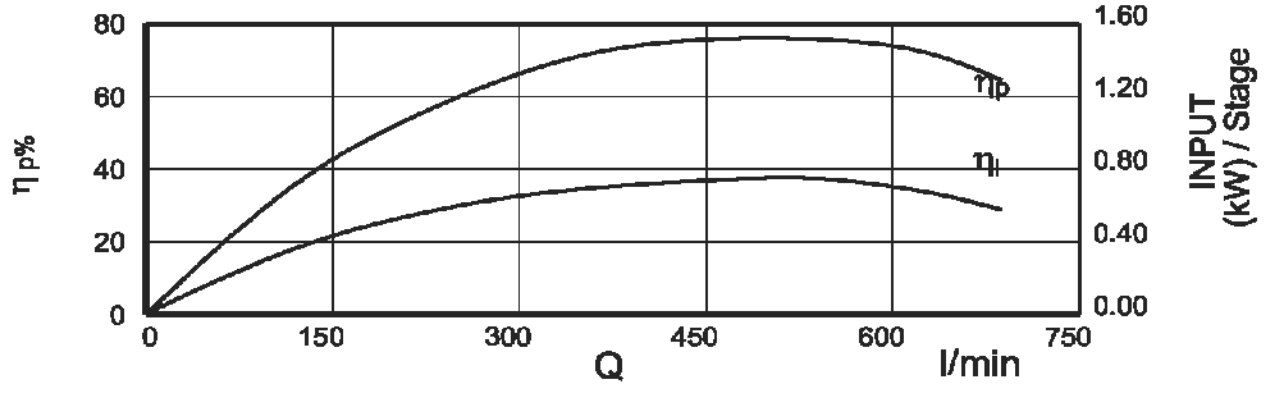

SS Submersible Pump

NP 30 SERIES

PERFORMANCE CURVE

30 m³/h

50 Hz / 2880 RPM

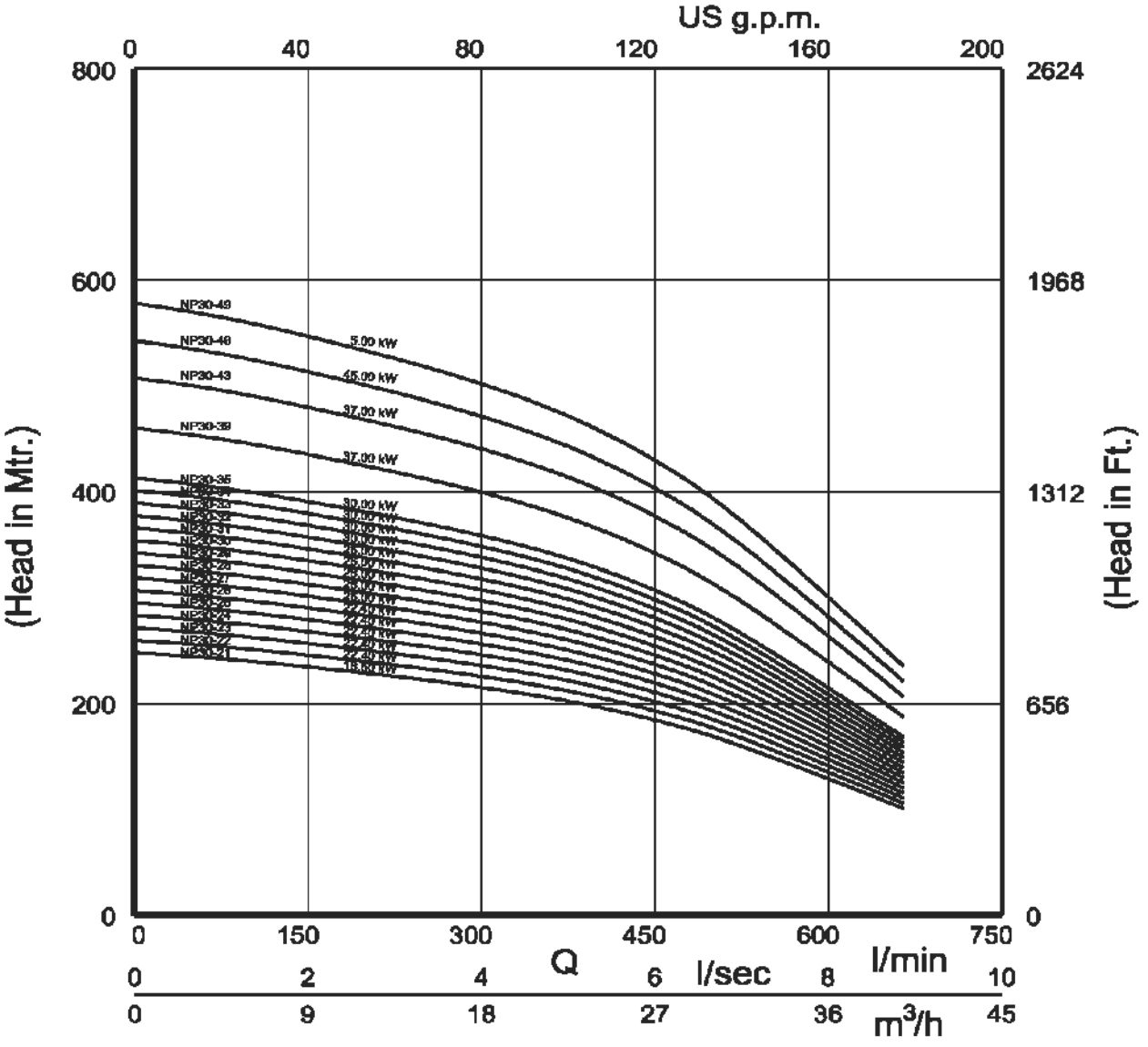

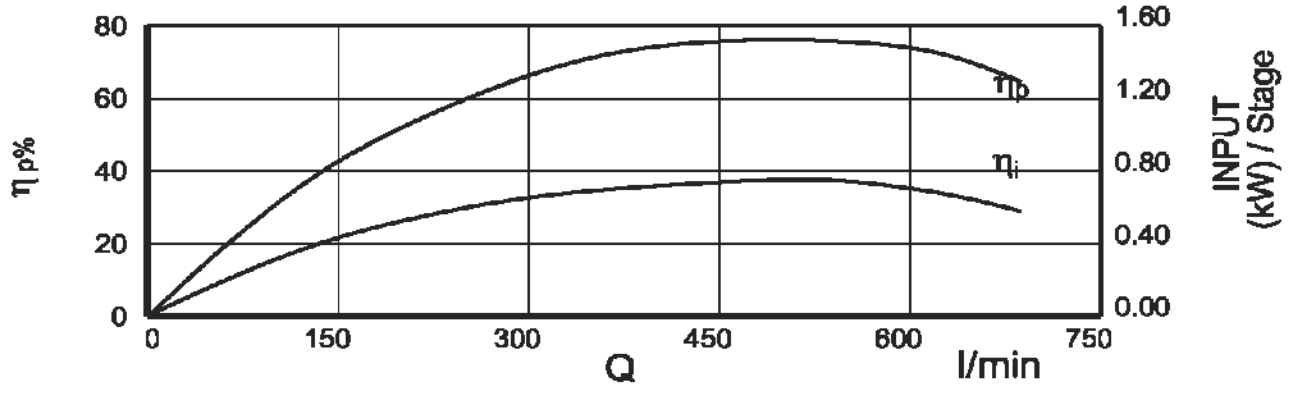

SECTIONAL VIEW NP-46

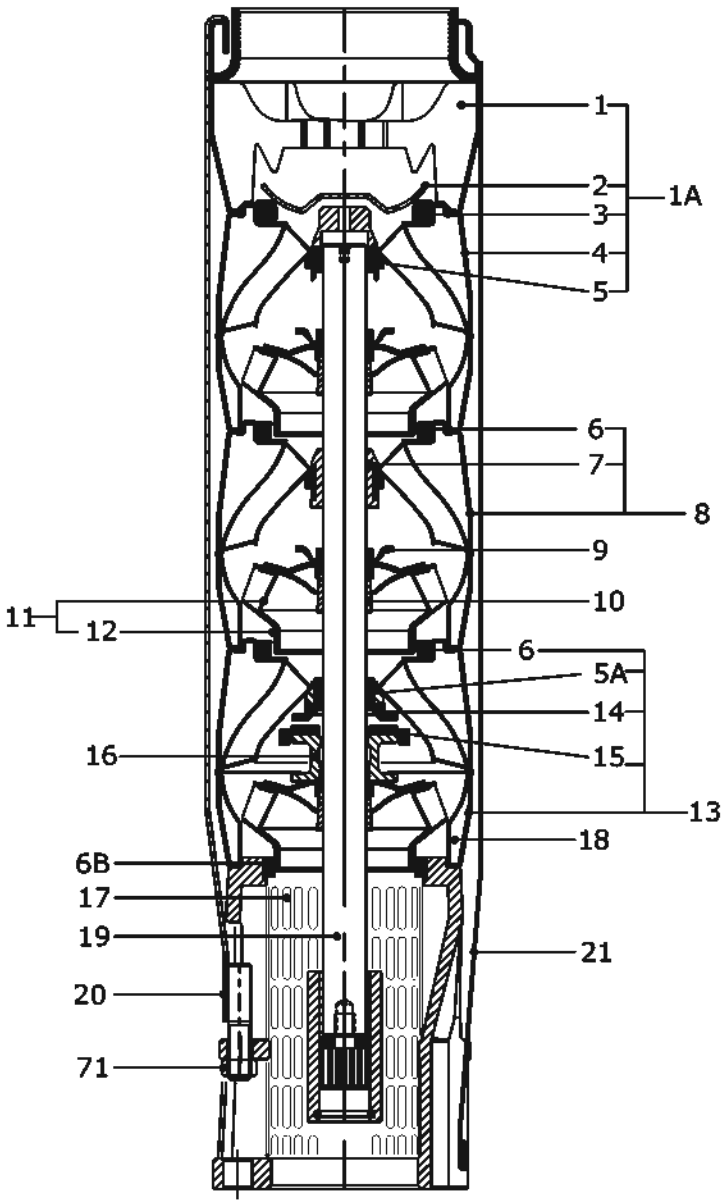

NP46-26 to NP46-30 Are Mounted
In Mounted Sleeve Rp 4" Connection

MATERIAL SPECIFICATION OF NP - 46

Part No.	Drawing No.	Description	Material	Quantity / Pump
1	46 40 5501	Discharge Chamber	Stainless Steel	01
2	30 11 0000	Valve Cup	Stainless Steel	01
3	46 14 0000	Valve Seat	Stainless Steel + NBR	01
4	46 33 0001	Inter Mediate Chamber Top	Stainless Steel	01
5	30 36 0000	Upper Bearing	NBR	01
5A		Lower Bearing	NBR	01
	30 34 0000	Cap	Stainless Steel	02
6	46 37 0000	Neck Ring	NBR + PPS	N-1
6B	46 38 0000	Neck Ring Bottom	Teflon	01
7	30 41 0000	Bearing Bush Inter Mediate	NBR	N-2
8	46 32 0001	Inter Mediate Chamber Stage	Stainless Steel	N-2
9	30 23 0000	Collet Nut	Stainless Steel	N-1
10	30 22 0000	Collet	Stainless Steel	N
11	46 21 0001	Impeller	Stainless Steel	N
12	46 21 0500	Wear Ring	Stainless Steel	N
13	46 31 0001	Inter Mediate Chamber Bottom	Stainless Steel	01
14	46 31 0900	Stop Ring	Stainless Steel	01
15	46 39 0000	Spacing Washer	Carbon+Graphite Hy 22 In PTFE Mass	01
16	46 24 0000	First Stage Nut	Stainless Steel	01
17	30 46 0000	Straine	Stainless Steel	01
18	30 85 0000	Suction Inter Connector	Stainless Steel	01
19	46 52 0066	Pump Shaft	Stainless Steel	01
20	46 53 0066	Strap	Stainless Steel	04
21	46 54 0066	Cable Guard	Stainless Steel	01
71	30 71 0000	Hex Nut	Stainless Steel	04
99	46 99 0000	Name Plate	Stainless Steel	01
				N = No. Of Stage

NIAGARA PUMPS THE SMART CHOICE ™

SS Submersible Pump

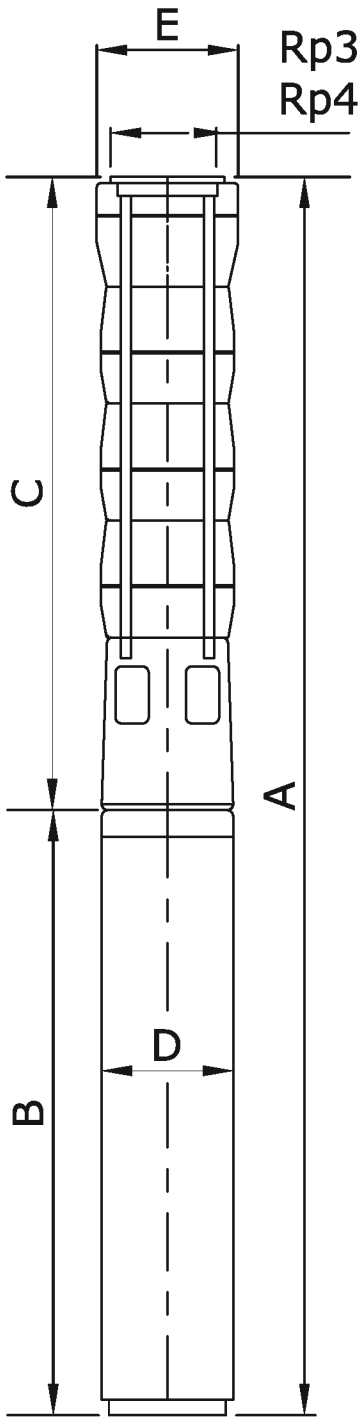

Technical Data NP - 46

PUMP TYPE	MOTOR TYPE	MOTOR RATING		DIMENSIONS(mm)										Net Weight (Kg)	
				Rp 3" Connection				Rp 4" Connection							
		KW	HP	A	C	E*	E**	A	C	E*	E**	B	D	Pump	Motor
NP46-1	4WFSS30	2.2	3	1041	363	142		1045	367	142		678	95	7	23
NP46-2	4WFSS40	3	4	1194	476	142		1198	480	142		718	95	9	26
NP46-3	4WFSS75	5.5	7.5	1507	589	142		1511	593	142		918	95	11	34
NP46-4	4WFSS10	7.5	10	1760	702	142		1764	706	142		1058	95	13	39
NP46-3	6WFCI75	5.5	7.5	1338	607	145	148	1342	613	145	148	729	142	12	48
NP46-4	6WFCI10	7.5	10	1481	720	145	148	1485	726	145	148	759	142	14	51
NP46-5	6WFCI10	7.5	10	1594	833	145	148	1598	839	145	148	759	142	16	51
NP46-6	6WFCI12	9.3	12.5	1777	946	145	148	1781	952	145	148	829	142	18	53
NP46-7	6WFCI15	11	15	1910	1059	145	148	1914	1065	145	148	849	142	20	60
NP46-8	6WFCI17	13	17.5	2103	1172	145	148	2107	1178	145	148	929	142	22	68
NP46-9	6WFTCI20	15	20	2270	1285	145	148	2274	1291	145	148	983	142	24	71
NP46-10	6WFTCI20	15	20	2383	1398	145	148	2387	1404	145	148	983	142	26	71
NP46-11	6WFTCI25	18.5	25	2524	1511	145	148	2528	1517	145	148	1013	142	28	76
NP46-12	6WFTCI25	18.5	25	2639	1624	145	148	2643	1630	145	148	1013	142	30	76
NP46-13	6WFTCI30	22.4	30	2792	1737	145	148	2796	1743	145	148	1053	142	32	79
NP46-14	6WFTCI30	22.4	30	2905	1850	145	148	2909	1856	145	148	1053	142	34	79
NP46-15	6WFTCI30	22.4	30	3018	1963	145	148	3022	1969	145	148	1053	142	36	79
NP46-16	6WFTCI35	26	35	3231	2076	145	148	3235	2082	145	148	1153	142	38	81
NP46-17	6WFTCI35	26	35	3344	2189	145	148	3348	2195	145	148	1153	142	40	81
NP46-18	6WFTCI40	30	40	3527	2302	145	148	3531	2308	145	148	1223	142	42	84
NP46-19	6WFTCI40	30	40	3640	2415	145	148	3644	2421	145	148	1223	142	44	84
NP46-20	6WFTCI40	30	40	3753	2528	145	148	3757	2534	145	148	1223	142	46	84
NP46-21	6WFTCI50	37	50	3976	2641	145	148	3980	2647	145	148	1333	142	48	94
NP46-22	6WFTCI50	37	50	4089	2754	145	148	4093	2760	145	148	1333	142	50	94
NP46-23	6WFTCI50	37	50	4204	2867	145	148	4206	2873	145	148	1333	142	52	94
NP46-24	6WFTCI50	37	50	4315	2980	145	148	4319	2986	145	148	1333	142	54	94
NP46-26	6WFTCI60	45	60	4611	3206	145	148	4615	3212	145	148	1403	142	60	100
NP46-28	6WFTCI60	45	60	4837	3432	145	148	4841	3438	145	148	1403	142	64	100
NP46-30	6WFTCI60	45	60	5063	3658	145	148	5067	3664	145	148	1403	142	68	100

*Maximum Diameter of Pump With One Motor Cable Guard
**Maximum Diameter of Pump With Two Motor Cable Guard

SS Submersible Pump

PERFORMANCE TABLE 50 Hz / 2880 RPM

NP-46			DISCHARGE (Q)									
		m³/h	0	10.3	19.5	28.5	37.5	48.0	53.7	59.4	64.5	68.7
		l/min	0	172	325	475	625	800	895	990	1075	1145
MODEL	MOTOR RATING		TOTAL HEAD IN (m)									
	kW	HP										
NP 46-1	2.20	3.0	14	13	12	11	10	8	8	6	5	4
NP 46-2	3.00	4.0	28	26	25	22	20	17	15	12	10	8
NP 46-3	5.50	7.5	41	40	38	34	30	26	22	19	15	11
NP 46-4	7.50	10.00	55	53	50	45	40	34	30	25	20	15
NP 46-5	7.50	10.00	69	66	62	56	50	42	38	31	25	19
NP 46-6	9.30	12.50	82	80	75	68	60	51	45	38	30	22
NP 46-7	11.00	15.00	96	93	88	79	70	60	52	44	35	26
NP 46-8	13.00	17.50	110	106	100	90	80	68	60	50	40	30
NP 46-9	15.00	20.00	124	119	112	101	90	76	68	56	45	34
NP 46-10	15.00	20.00	138	132	125	112	100	85	75	62	50	38
NP 46-11	18.50	25.00	151	146	138	124	110	94	82	69	55	41
NP 46-12	18.50	25.00	165	159	150	135	120	102	90	75	60	45
NP 46-13	22.40	30.00	179	172	162	146	130	110	98	81	65	49
NP 46-14	22.40	30.00	192	186	175	158	140	119	105	88	70	52
NP 46-15	22.40	30.00	206	199	188	169	150	128	112	94	75	56
NP 46-16	26.00	35.00	220	212	200	180	160	136	120	100	80	60
NP 46-17	26.00	35.00	234	225	212	191	170	144	128	106	85	64
NP 46-18	30.00	40.00	248	238	225	202	180	153	135	112	90	68
NP 46-19	30.00	40.00	261	252	238	214	190	162	142	119	95	71
NP 46-20	30.00	40.00	275	265	250	225	200	170	150	125	100	75
NP 46-21	37.00	50.00	289	278	262	236	210	178	158	131	105	79
NP 46-22	37.00	50.00	302	292	275	248	220	187	165	138	110	82
NP 46-23	37.00	50.00	316	305	288	259	230	196	172	144	115	86
NP 46-24	37.00	50.00	330	318	300	270	240	204	180	150	120	90
NP 46-26	45.00	60.00	358	344	325	292	260	221	195	162	130	98
NP 46-28	45.00	60.00	385	371	350	315	280	238	210	175	140	105
NP 46-30	45.00	60.00	412	398	375	338	300	255	225	188	150	112

SS Submersible Pump

NP 46 SERIES

PERFORMANCE CURVE

46 m³/h

50 Hz / 2880 RPM

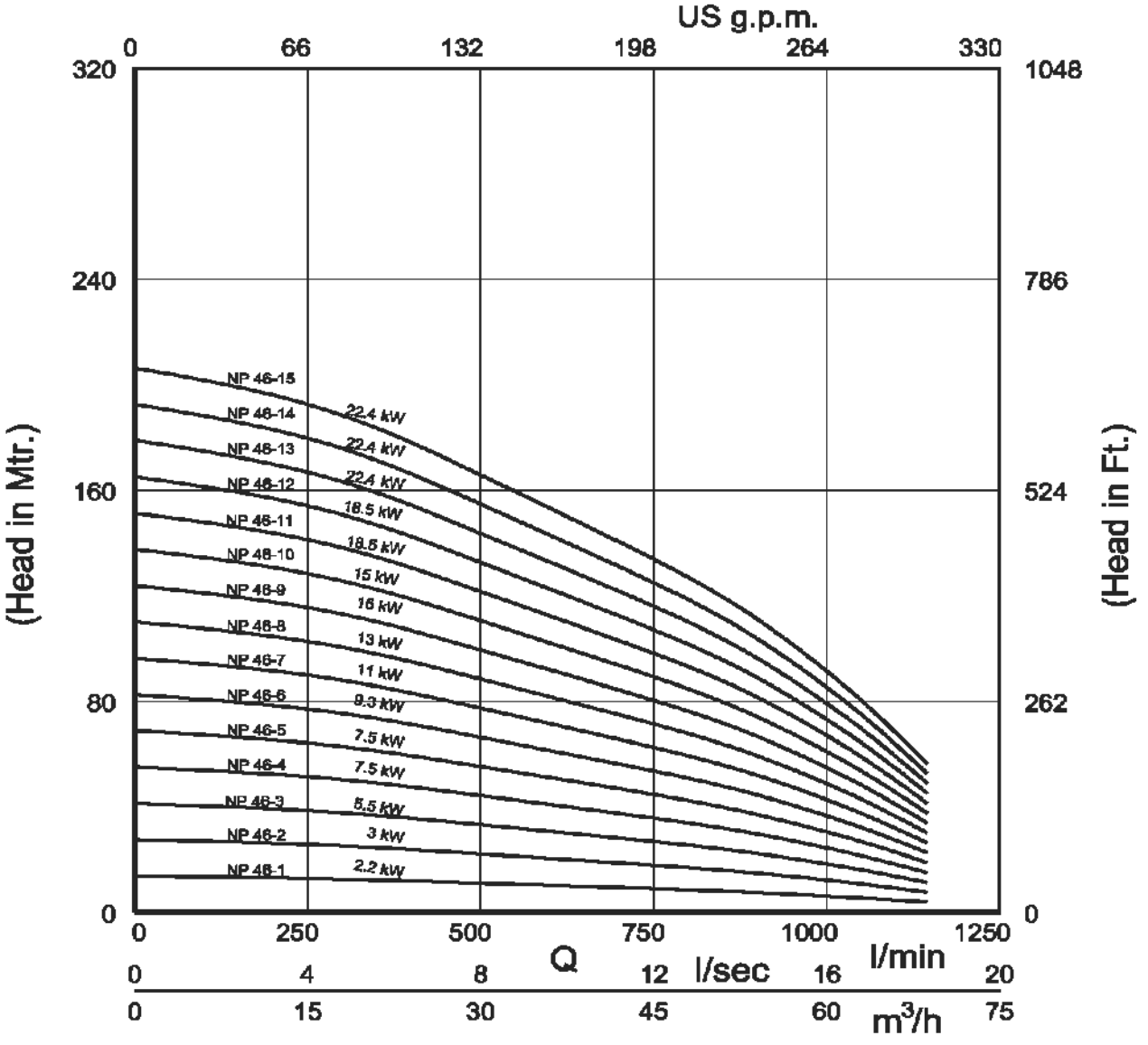

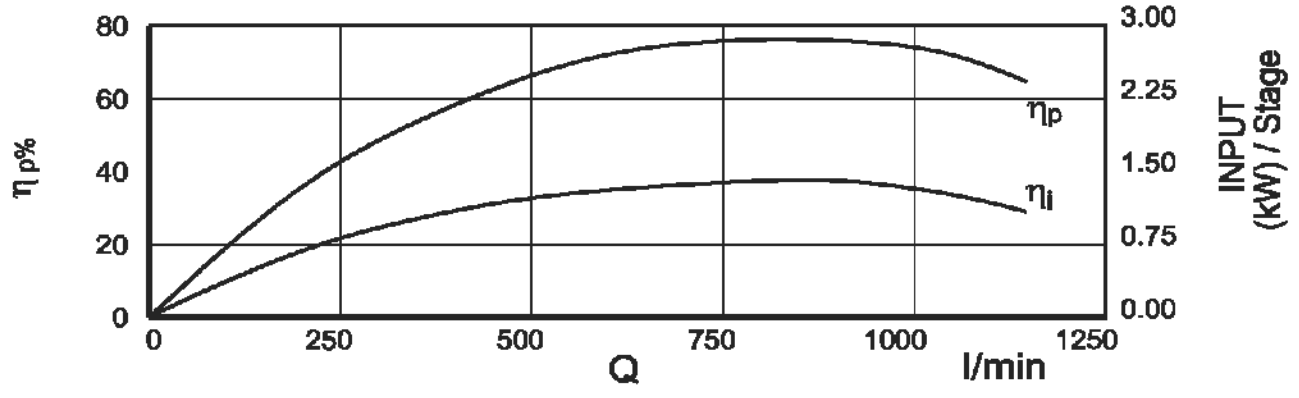

SS Submersible Pump

NP 46 SERIES

PERFORMANCE CURVE

46 m³/h

50 Hz / 2880 RPM

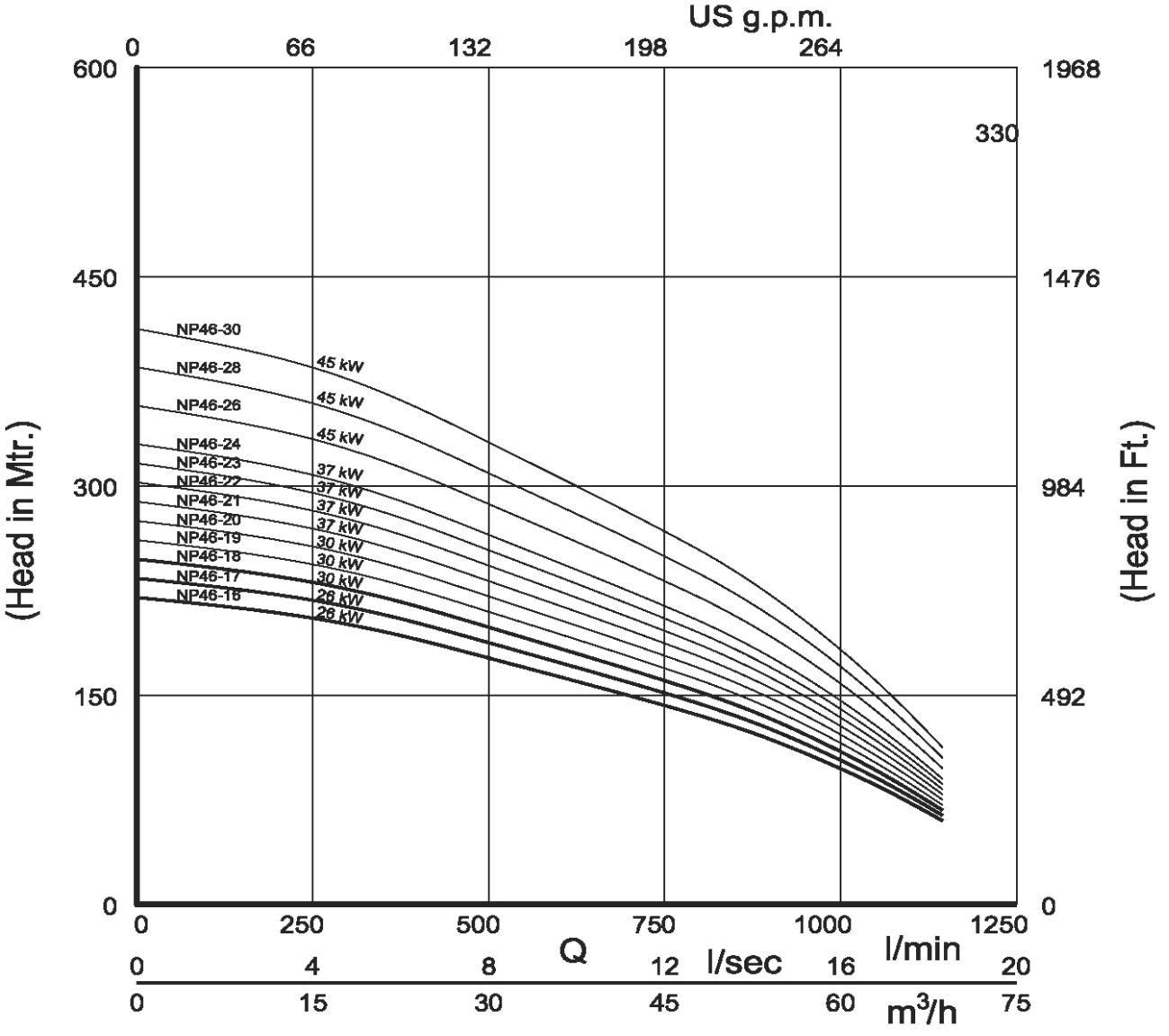

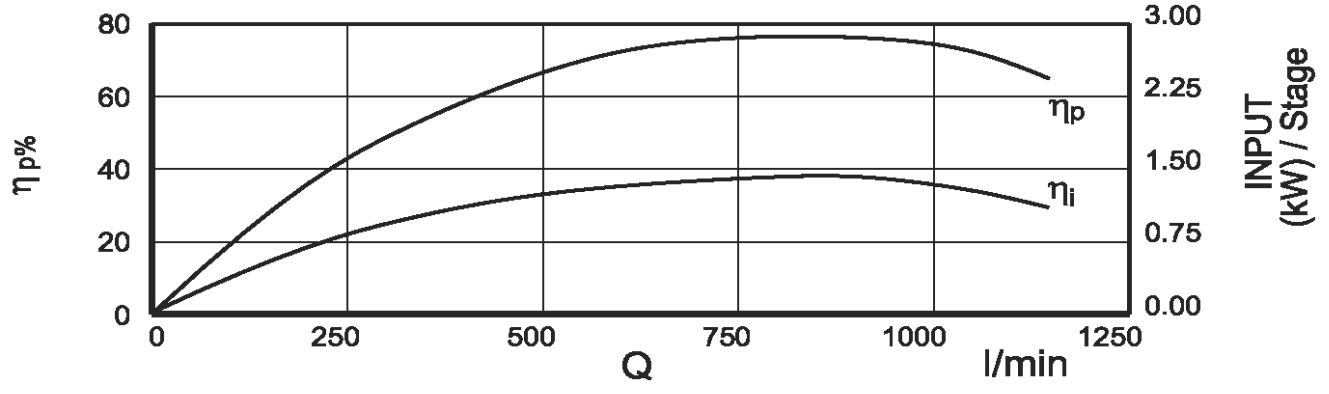

SECTIONAL VIEW NP-60

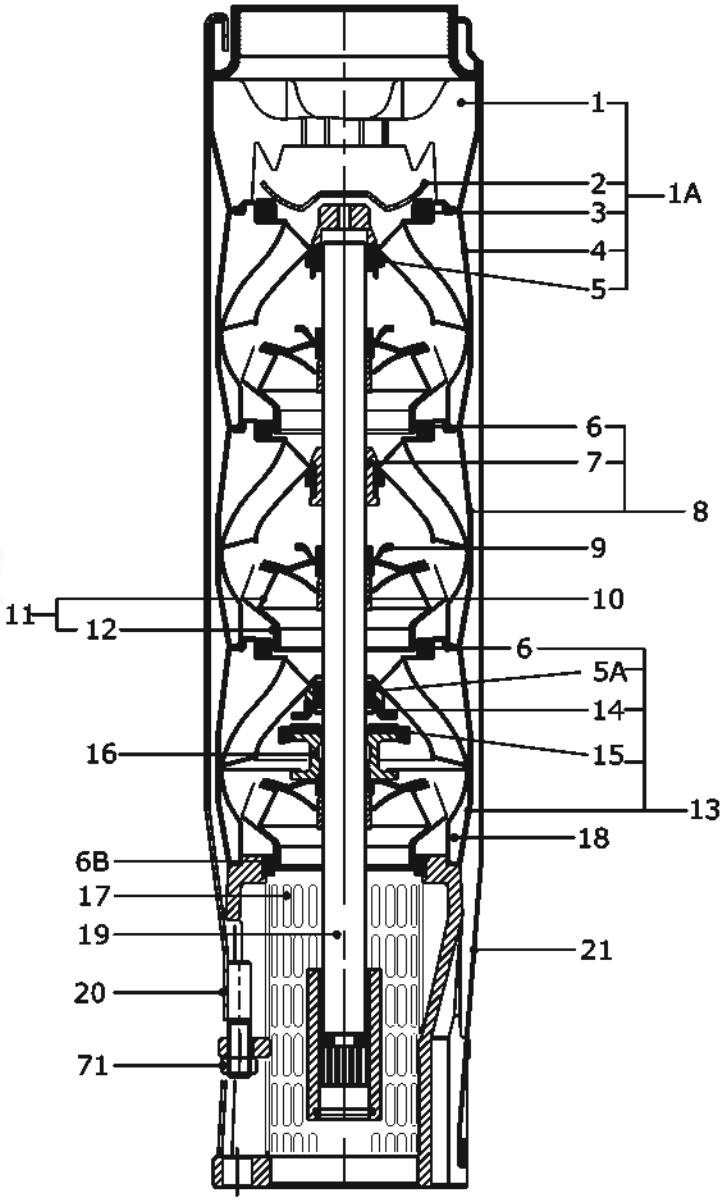

MATERIAL SPECIFICATION OF NP - 60

Part No.	Drawing No.	Description	Material	Quantity / Pump
1	46 40 5501	Discharge Chamber	Stainless Steel	01
2	30 11 0000	Valve Cup	Stainless Steel	01
3	46 14 0000	Valve Seat	Stainless Steel + NBR	01
4	46 33 0001	Inter Mediate Chamber Top	Stainless Steel	01
5	30 36 0000	Upper Bearing	NBR	01
5A		Lower Bearing	NBR	01
	30 34 0000	Cap	Stainless Steel	02
6	46 37 0000	Neck Ring	NBR + PPS	N-1
6B	46 38 0000	Neck Ring Bottom	Teflon	01
7	30 41 0000	Bearing Bush Inter Mediate	NBR	N-2
8	46 32 0001	Inter Mediate Chamber Stage	Stainless Steel	N-2
9	30 23 0000	Collet Nut	Stainless Steel	N-1
10	30 22 0000	Collet	Stainless Steel	N
11	46 21 0001	Impeller	Stainless Steel	N
12	46 21 0500	Wear Ring	Stainless Steel	N
13	46 31 0001	Inter Mediate Chamber Bottom	Stainless Steel	01
14	46 31 0900	Stop Ring	Stainless Steel	01
15	46 39 0000	Spacing Washer	Carbon+Graphite Hy 22 In PTFE Mass	01
16	46 24 0000	First Stage Nut	Stainless Steel	01
17	30 46 0000	Straine	Stainless Steel	01
18	30 85 0000	Suction Inter Connector	Stainless Steel	01
19	46 52 0066	Pump Shaft	Stainless Steel	01
20	46 53 0066	Strap	Stainless Steel	04
21	46 54 0066	Cable Guard	Stainless Steel	01
71	30 71 0000	Hex Nut	Stainless Steel	04
99	46 99 0000	Name Plate	Stainless Steel	01
				N = No. Of Stage

Technical Data NP - 60

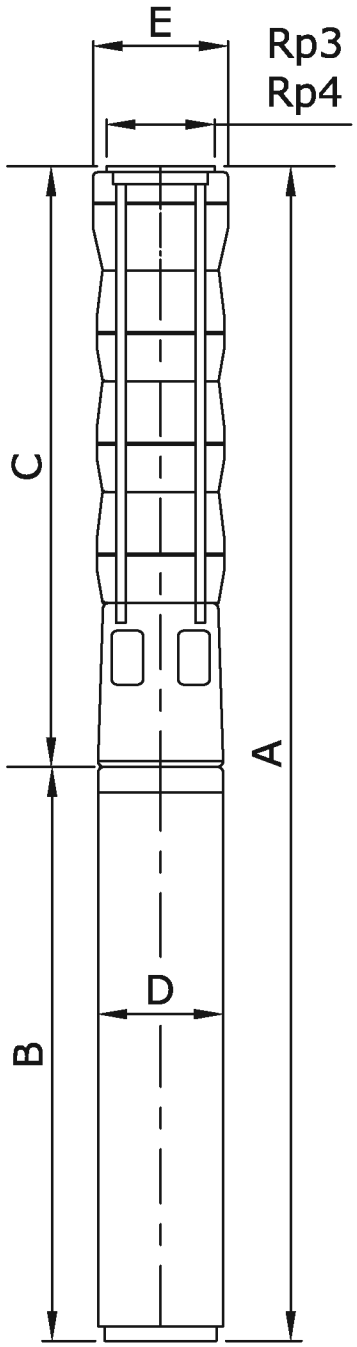

PUMP TYPE	MOTOR TYPE	MOTOR RATING		DIMENSIONS(mm)										Net Weight (Kg)	
				Rp 3" Connection				Rp 4" Connection						Pump	Motor
		KW	HP	A	C	E*	E**	A	C	E*	E**	B	D		
NP60-1	4WFSS30	2.2	3	1041	363	142		1045	367	142		678	95	7	23
NP60-2	4WFSS60	4	6	1194	476	142		1198	480	142		718	95	9	26
NP60-3	4WFSS75	5.5	7.5	1507	589	142		1511	593	142		918	95	11	34
NP60-4	4WFSS10	7.5	10	1760	702	142		1764	706	142		1058	95	13	39
NP60-3	6WFCI75	5.5	7.5	1338	607	145	148	1342	613	145	148	729	142	12	48
NP60-4	6WFCI10	7.5	10	1481	720	145	148	1485	726	145	148	759	142	14	51
NP60-5	6WFCI12	9.3	12.5	1664	833	145	148	1668	839	145	148	829	142	16	53
NP60-6	6WFCI15	11	15	1797	946	145	148	1801	952	145	148	849	142	18	60
NP60-7	6WFCI17	13	17.5	1990	1059	145	148	1994	1065	145	148	929	142	20	68
NP60-8	6WFCI20	15	20	2157	1172	145	148	2161	1178	145	148	983	142	22	71
NP60-9	6WFTCI25	18.5	25	2300	1285	145	148	2304	1291	145	148	1013	142	24	76
NP60-10	6WFTCI25	18.5	25	2414	1398	145	148	2417	1404	145	148	1013	142	26	76
NP60-11	6WFTCI30	22.4	30	2564	1511	145	148	2570	1517	145	148	1053	142	28	79
NP60-12	6WFTCI30	22.4	30	2679	1624	145	148	2683	1630	145	148	1053	142	30	79
NP60-13	6WFTCI35	26	35	2892	1737	145	148	2896	1743	145	148	1153	142	32	81
NP60-14	6WFTCI35	26	35	3005	1850	145	148	3009	1856	145	148	1153	142	34	81
NP60-15	6WFTCI35	26	35	3118	1963	145	148	3122	1969	145	148	1153	142	36	81
NP60-16	6WFTCI40	30	40	3301	2076	145	148	3305	2082	145	148	1223	142	38	84
NP60-17	6WFTCI40	30	40	3414	2189	145	148	3418	2195	145	148	1223	142	40	84
NP60-18	6WFTCI50	37	50	3637	2302	145	148	3641	2308	145	148	1333	142	42	94
NP60-19	6WFTCI50	37	50	3750	2415	145	148	3754	2421	145	148	1333	142	44	94
NP60-20	6WFTCI50	37	50	3863	2528	145	148	3867	2534	145	148	1333	142	46	94
NP60-21	6WFTCI50	37	50	3976	2641	145	148	3980	2647	145	148	1333	142	48	94
NP60-22	6WFTCI60	45	60	4159	2754	145	148	4163	2760	145	148	1403	142	50	100
NP60-24	6WFTCI60	45	60	4272	2867	145	148	4276	2873	145	148	1403	142	54	100

*Maximum Diameter of Pump With One Motor Cable Guard
**Maximum Diameter of Pump With Two Motor Cable Guard

SS Submersible Pump

PERFORMANCE TABLE 50 Hz / 2880 RPM

NP-60			DISCHARGE (Q)								
		m³/h	0	9.0	18.0	30.1	42.3	59.4	69.9	77.7	85.2
		l/min	0	150	300	501	705	990	1165	1295	1420
MODEL	MOTOR RATING		TOTAL HEAD IN (m)								
	kW	HP									
NP 60-1	2.20	3.00	15	14	13	12	10	8	7	5	3
NP 60-2	4.00	6.00	29	28	27	23	20	17	13	10	7
NP 60-3	5.50	7.50	44	42	40	35	30	25	20	15	10
NP 60-4	7.50	10.00	59	56	54	47	40	34	27	20	14
NP 60-5	9.30	12.50	74	70	67	58	50	42	34	25	17
NP 60-6	11.00	15.00	88	84	80	70	60	50	40	30	20
NP 60-7	13.00	17.50	103	98	94	82	70	59	47	35	24
NP 60-8	15.00	20.00	118	112	107	94	80	67	54	40	27
NP 60-9	18.50	25.00	132	126	121	105	90	76	60	45	31
NP 60-10	18.50	25.00	147	140	134	117	100	84	67	50	34
NP 60-11	22.40	30.00	162	154	147	129	110	92	74	55	37
NP 60-12	22.40	30.00	176	168	161	140	120	101	80	60	41
NP 60-13	26.00	35.00	191	182	174	152	130	109	87	65	44
NP 60-14	26.00	35.00	206	196	188	164	140	118	94	70	48
NP 60-15	26.00	35.00	220	210	201	176	150	126	100	75	51
NP 60-16	30.00	40.00	235	224	214	187	160	134	107	80	54
NP 60-17	30.00	40.00	250	238	228	199	170	143	114	85	58
NP 60-18	37.00	50.00	265	252	241	211	180	151	121	90	61
NP 60-19	37.00	50.00	279	266	255	222	190	160	127	95	65
NP 60-20	37.00	50.00	294	280	268	234	200	168	134	100	68
NP 60-21	37.00	50.00	309	294	281	246	210	176	141	105	71
NP 60-22	45.00	60.00	323	308	295	257	220	185	147	110	75
NP 60-24	45.00	60.00	353	336	322	281	240	202	161	120	82

SS Submersible Pump

NP 60 SERIES

PERFORMANCE CURVE

60 m³/h

50 Hz / 2880 RPM

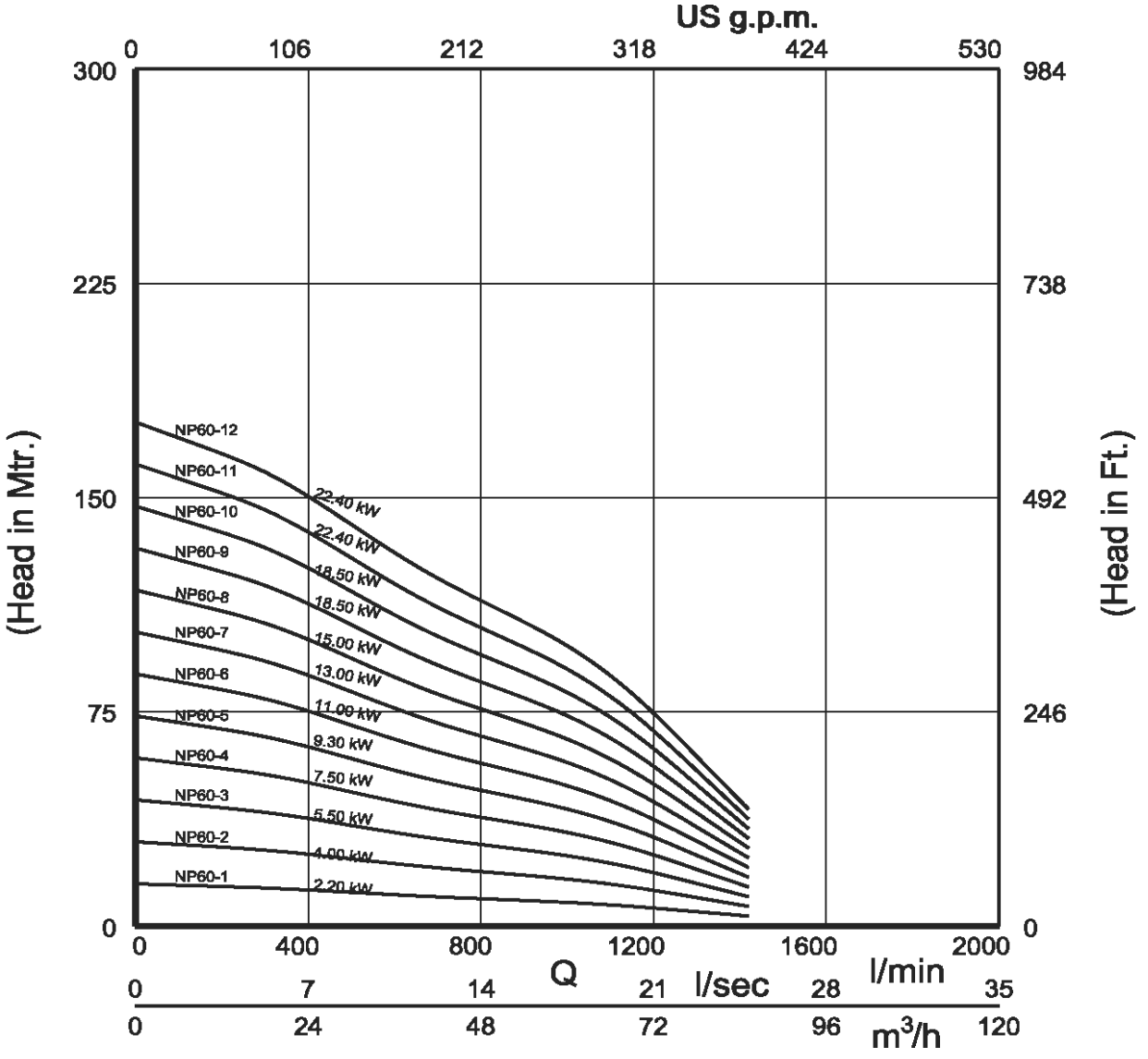

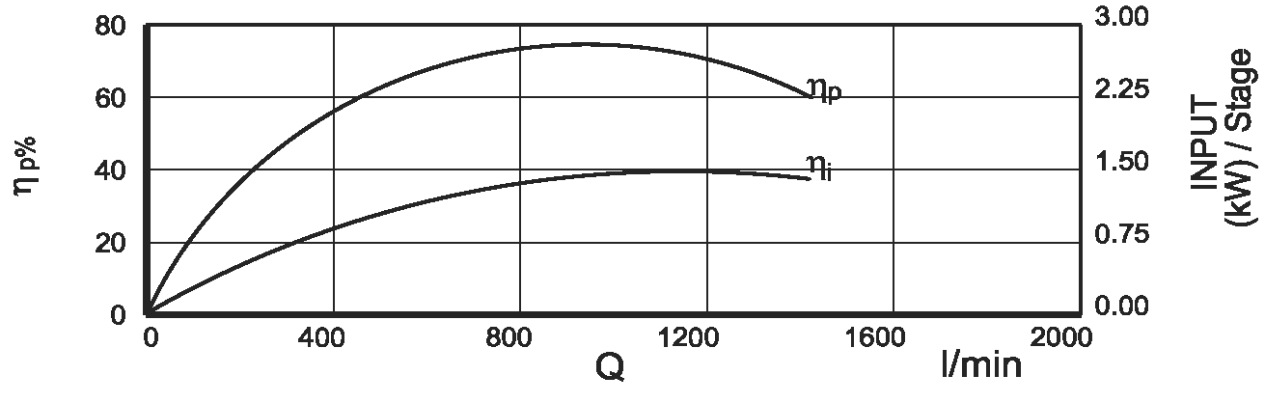

SS Submersible Pump

NP 60 SERIES
PERFORMANCE CURVE

60 m³/h

50 Hz / 2880 RPM

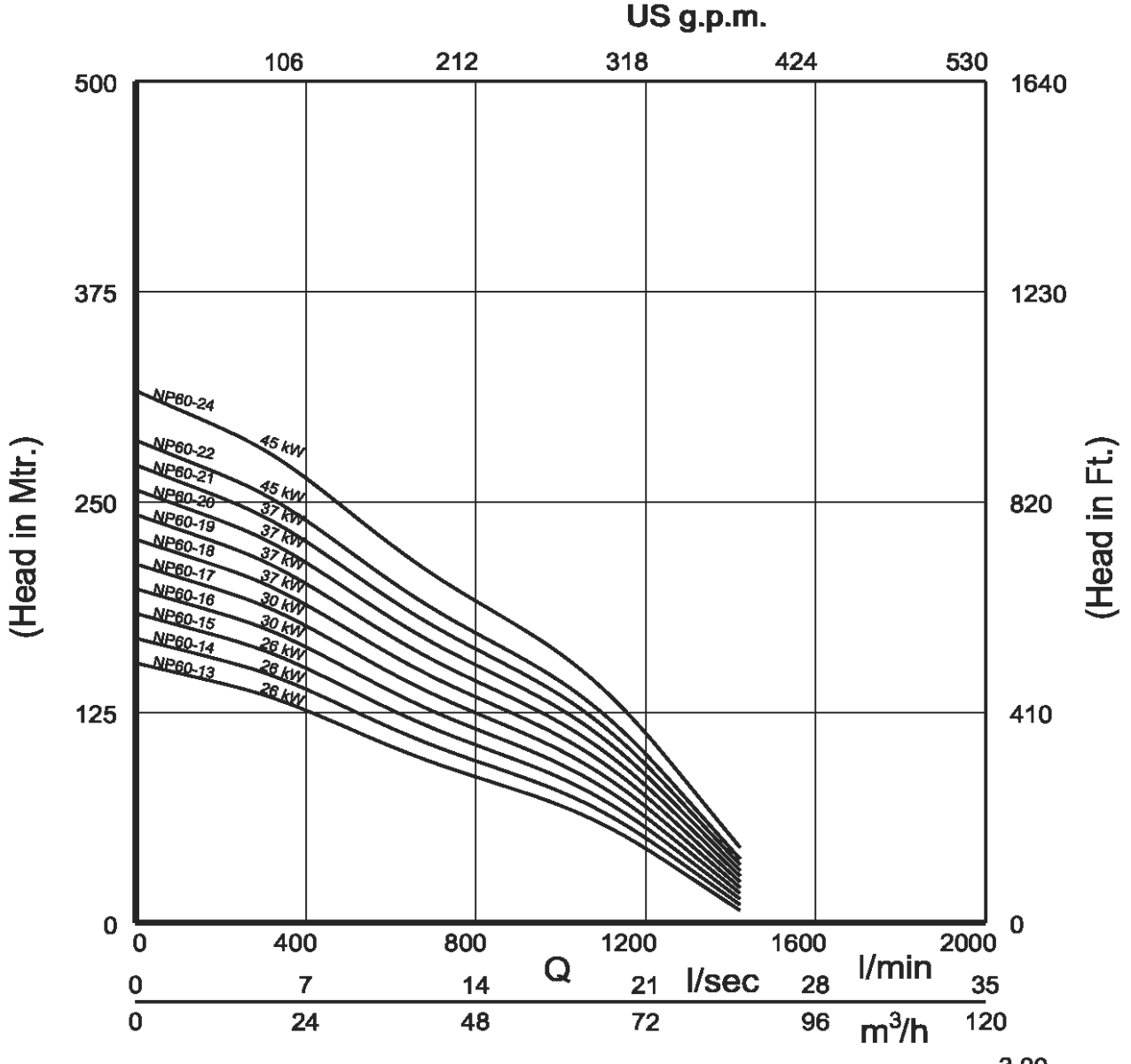

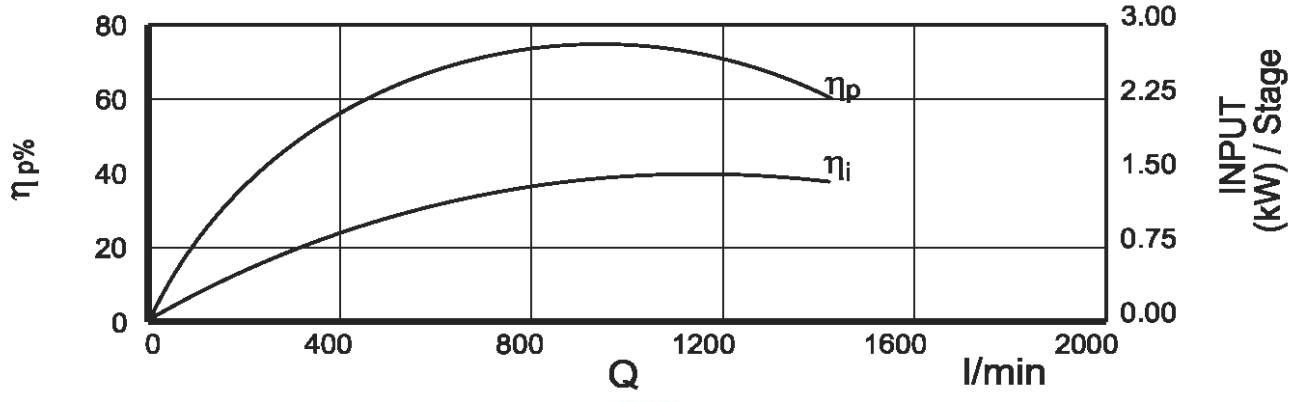

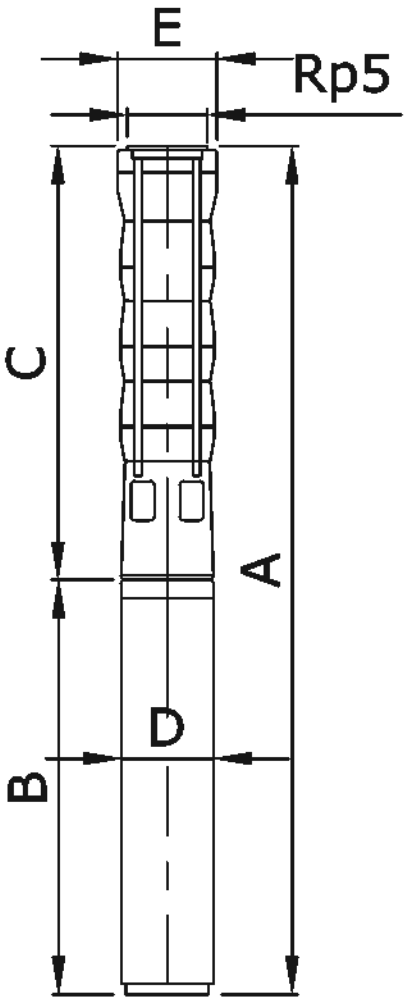

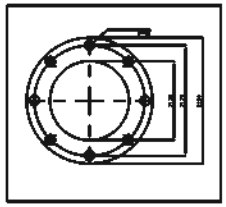

Technical Data NP - 77

PUMP TYPE	MOTOR TYPE	MOTOR RATING		DIMENSION IN mm										Net Weight (Kg)	
				Rp 5.0" Connection				Rp 5.0" Flange						Pump	Motor
		KW	HP	A	C	E*	E**	A	C	E*	E**	B	D		
NP77-1	6WFCI75	5.5	7.5	1161	618	178	186	1161	618	200	200	543	142	20	—
NP77-2	6WFCI10	7.5	10	1320	746	178	186	1320	746	200	200	574	142	24	—
NP77-3	6WFCI15	11	15	1508	874	178	186	1508	874	200	200	604	142	28	—
NP77-4	6WFTCI20	15	20	1701	1003	178	186	1701	1003	200	200	634	142	32	—
NP77-5	6WFTCI25	18.5	25	1885	1131	178	186	1885	1131	200	200	664	142	36	—
NP77-6	6WFTCI30	22.4	30	2071	1259	178	186	2071	1259	200	200	698	142	40	—
NP77-7	6WFTCI35	26	35	2261	1387	178	186	2261	1387	200	200	812	142	44	—
NP77-8	6WFTCI40	30	40	2459	1515	178	186	2459	1515	200	200	874	142	48	—
NP77-9	6WFTCI40	30	40	2587	1643	178	186	2587	1643	200	200	944	142	52	—
NP77-10	8WFTCI50	37	50	2911	1771	196	205	2911	1771	205	205	1140	188	56	—
NP77-11	8WFTCI50	37	50	3054	1914	196	205	3054	1914	205	205	1140	188	60	—
NP77-12	8WFTCI60	45	60	3273	2043	196	205	3273	2043	205	205	1140	188	64	—
NP77-13	8WFTCI75	55	75	3512	2172	196	205	3512	2172	205	205	1140	188	68	—
NP77-14	8WFTCI75	55	75	3640	2300	196	205	3640	2300	205	205	1230	188	72	—
NP77-15	8WFTCI75	55	75	3769	2428	196	205	3769	2428	205	205	1340	188	76	—
NP77-16	8WFTCI85	63	85	4047	2557	196	205	4047	2557	205	205	1340	188	80	—
NP77-17	8WFTCI85	63	85	4175	2687	196	205	4175	2687	205	205	1340	188	84	—
NP77-18	8WFTCI85	63	85	4304	2814	196	205	4304	2814	205	205	1490	188	88	—
NP77-19	8WFTCI100	75	100	4796	3236	196	205	4796	3236	205	205	1490	188	92	—
NP77-20	8WFTCI100	75	100	4924	3364	196	205	4924	3364	205	205	1490	188	96	—

*Maximum Diameter of Pump With One Motor Cable Guard
**Maximum Diameter of Pump With Two Motor Cable Guard

PERFORMANCE TABLE 50 Hz / 2880 RPM

NP-77	DISCHARGE (Q)												
	m^3/h		0	10	20	30	40	50	60	70	80	90	100
	l/min		0	167	334	500	667	833	1000	1167	1333	1500	1667
MODEL	MOTOR RATING		TOTAL HEAD IN (m)										
	KW	HP											
NP 77-1	5.5	7.5	21	21	20	18	17	15	14	13	12	10	7
NP 77-2	7.5	10	41	40	39	36	33	31	28	26	23	18	13
NP 77-3	11	15	61	60	58	55	50	46	42	39	34	28	20
NP 77-4	15	20	81	80	78	73	68	62	57	52	46	38	27
NP 77-5	18.5	25	100	100	97	92	85	78	72	66	58	47	34
NP 77-6	22.4	30	120	120	116	110	102	94	86	78	69	56	41
NP 77-7	26	35	140	140	136	129	119	110	101	92	81	66	48
NP 77-8	30	40	160	160	156	147	137	126	116	105	93	76	55
NP 77-9	30	40	179	179	174	164	152	140	129	117	103	85	61
NP 77-10	37	50	199	199	194	184	171	157	145	132	117	96	69
NP 77-11	37	50	218	218	212	201	186	172	158	144	127	104	74
NP 77-12	45	60	242	243	237	225	20	193	178	163	145	120	88
NP 77-13	55	75	264	264	258	245	228	211	195	178	159	132	98
NP 77-14	55	75	283	283	277	263	245	226	209	191	170	141	104
NP 77-15	55	75	303	303	296	281	262	242	223	204	181	150	110
NP 77-16	63	85	324	324	317	301	281	259	239	219	195	162	119
NP 77-17	63	85	343	343	336	319	27	274	253	232	206	171	126
NP 77-18	63	85	363	363	355	337	314	290	267	244	217	180	132
NP 77-19	75	100	383	383	376	357	332	307	283	259	230	191	140
NP 77-20	75	100	402	402	395	375	349	322	297	271	241	200	146

SS Submersible Pump

NP 77 SERIES

PERFORMANCE CURVE

77 m³/h

50 Hz / 2880 RPM

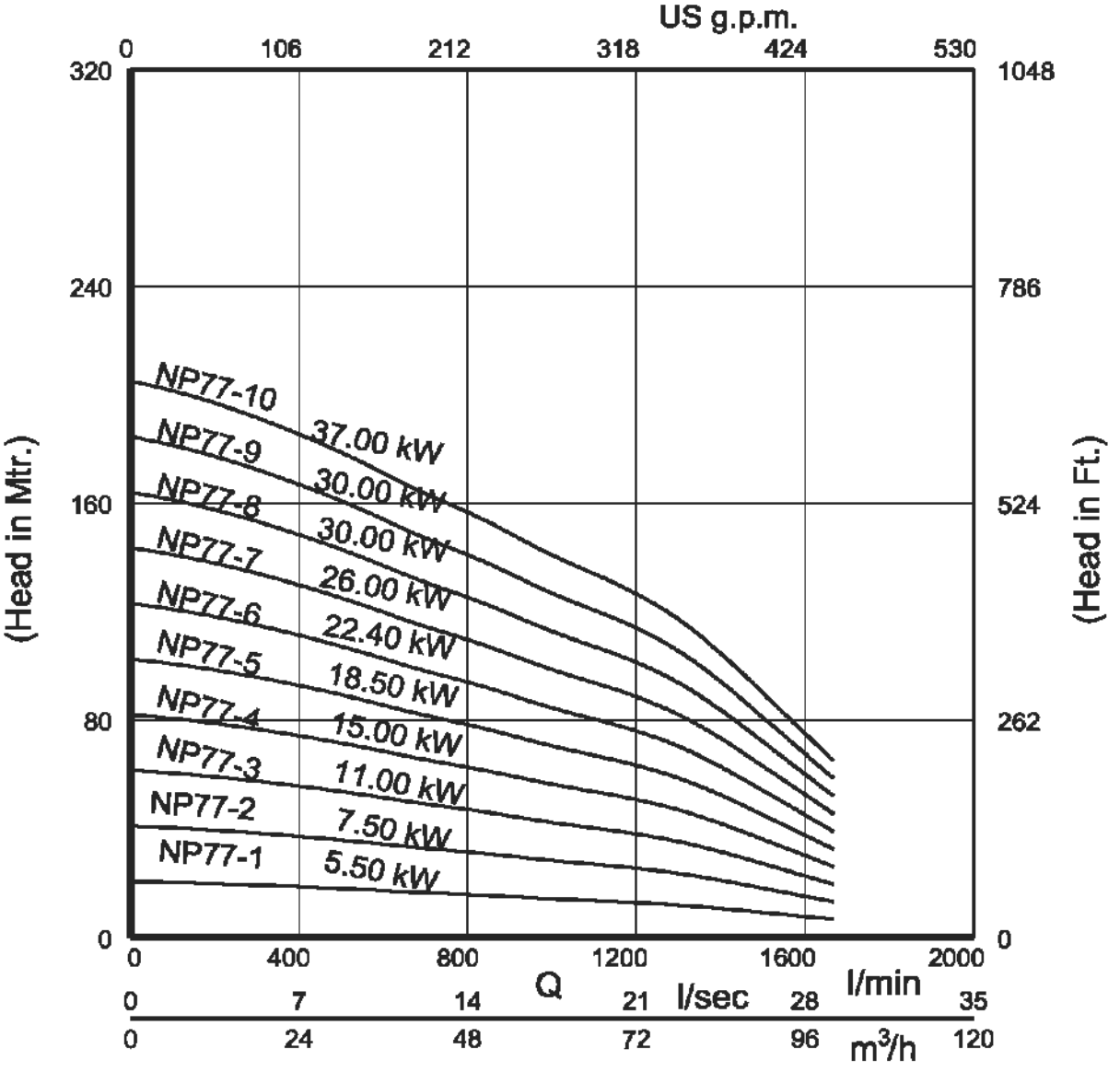

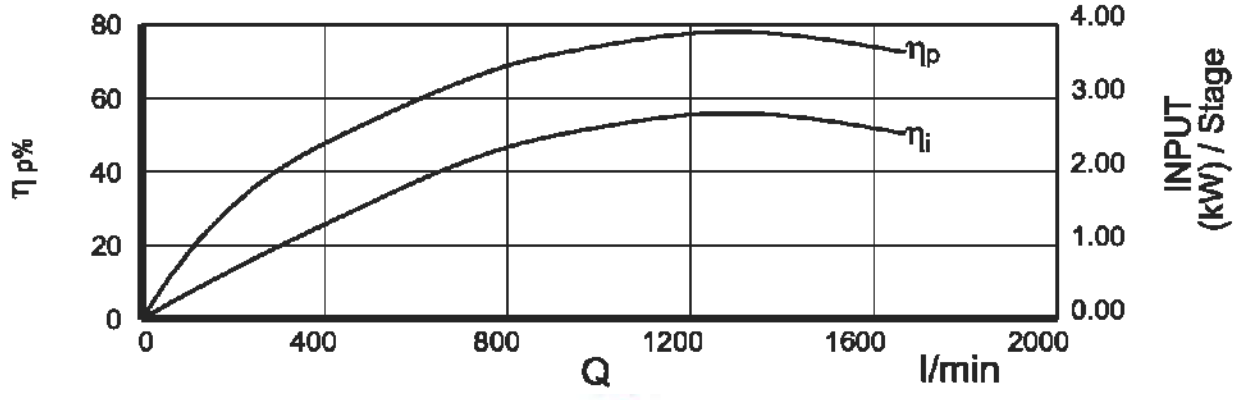

SS Submersible Pump

NP 77 SERIES

PERFORMANCE CURVE

77 m³/h

50 Hz / 2880 RPM

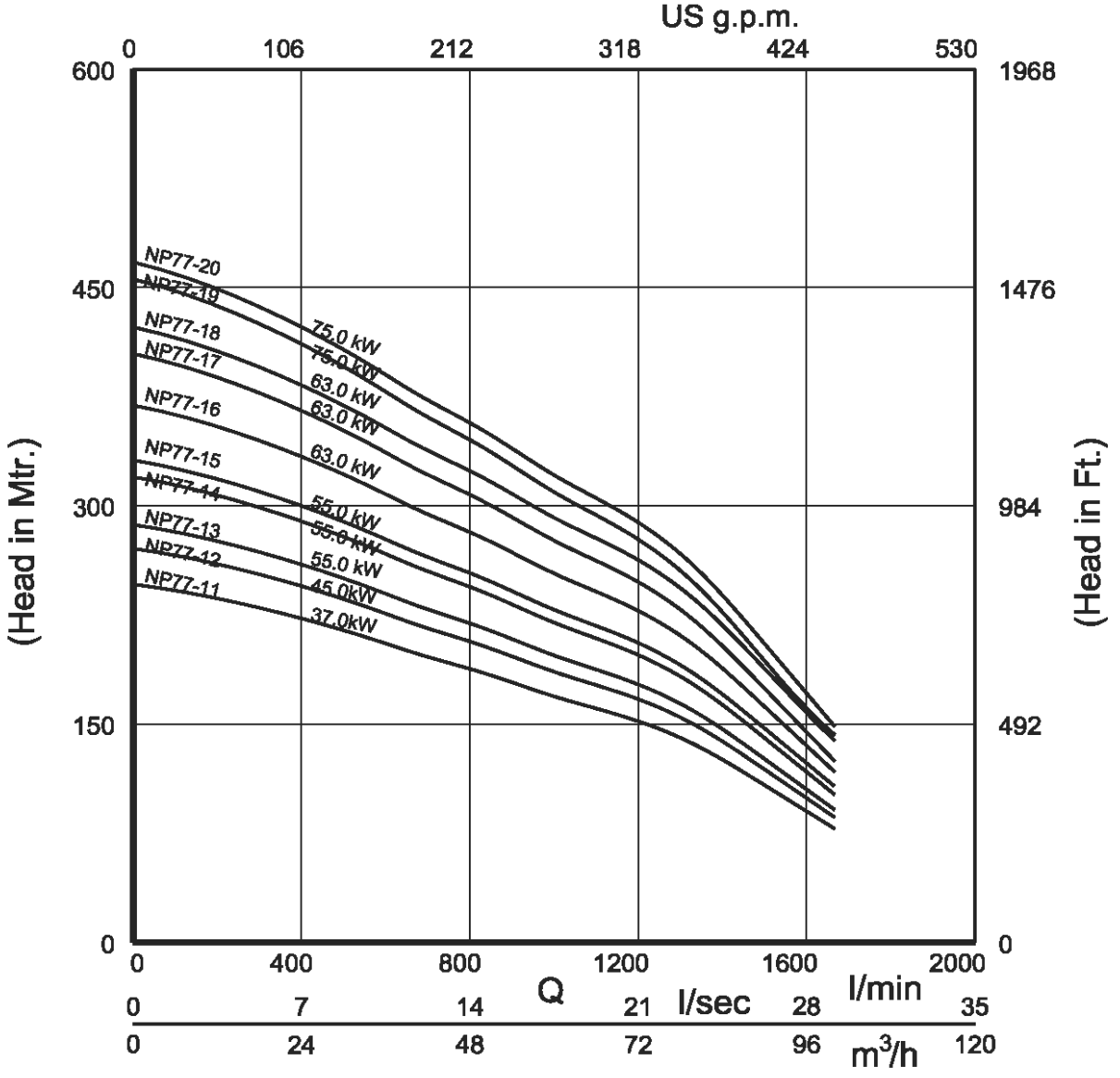

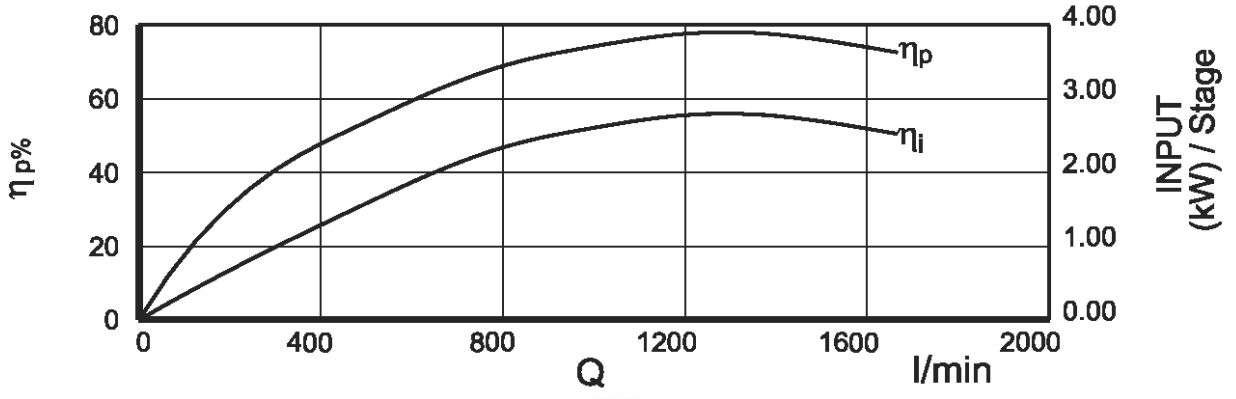

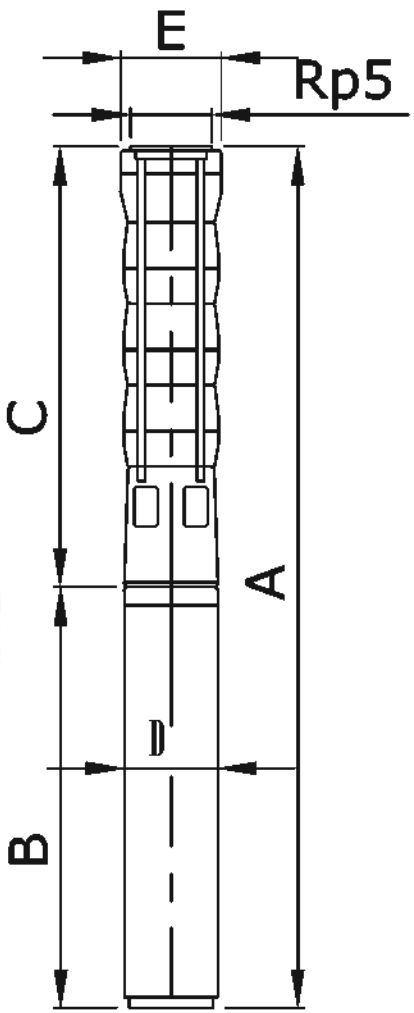

Technical Data NP - 95

PUMP TYRE	MOTOR TYRE	MOTOR RATING		DIMENSION IN mm										Net Weight (Kg.)	
				Rp 5.0" Connection				Rp 5.0" Flange						Pump	Motor
		KW	HP	A	C	E*	E**	A	C	E*	E**	B	D		
NP95-1	6WFCI75	5.5	7.5	1161	618	178	186	1161	618	200	200	543	142	20	—
NP95-2	6WFCI12	9.3	12.5	1350	746	178	186	1350	746	200	200	604	142	24	—
NP95-3	6WFCI17	13	17.5	1538	874	178	186	1538	874	200	200	664	142	28	—
NP95-4	6WFTCI25	18.5	25	1757	1003	178	186	1757	1003	200	200	774	142	32	—
NP95-5	6WFTCI30	22.4	30	1943	1131	178	186	1943	1131	200	200	812	142	36	—
NP95-6	6WFTCI35	26	35	2133	1259	178	186	2133	1259	200	200	874	142	40	—
NP95-7	6WFTCI40	30	40	2331	1387	178	186	2331	1387	200	200	944	142	44	—
NP95-8	8WFTCI50	37	50	2655	1515	160	205	2655	1515	200	200	1140	188	48	—
NP95-9	8WFTCI60	45	60	2872	1643	160	205	2872	1643	205	205	1230	188	52	—
NP95-10	8WFTCI60	45	60	3015	1771	160	205	3015	1771	205	205	1230	188	56	—
NP95-11	8WFTCI75	55	75	3254	1914	160	205	3254	1914	205	205	1340	188	60	—
NP95-12	8WFTCI75	55	75	3383	2043	160	205	3383	2043	205	205	1340	188	64	—
NP95-13	8WFTCI75	55	75	3512	2172	160	205	3512	2172	205	205	1340	188	68	—
NP95-14	8WFTCI85	63	85	3770	2300	160	205	3770	2300	205	205	1470	188	72	—
NP95-15	8WFTCI100	75	100	3989	2428	160	205	—	—	—	—	1490	188	76	—
NP95-16	8WFTCI100	75	100	4117	2557	160	205	—	—	—	—	1560	188	80	—
NP95-17	8WFTCI100	75	100	4245	2687	160	205	—	—	—	—	1560	188	84	—
NP95-18	8WFTCI125	92	125	4848	2814	160	205	—	—	—	—	1560	188	88	—
NP95-19	8WFTCI125	92	125	4976	3236	160	205	—	—	—	—	1740	188	92	—
NP95-20	8WFTCI125	92	125	5104	3364	160	205	—	—	—	—	1740	188	96	—

*Maximum Diameter of Pump with One Motor Cable Guard
**Maximum Diameter of Pump with Two Motor Cable Guard

PERFORMANCE TABLE

50 Hz / 2880 RPM

NP-95			DISCHARGE (Q)										
	m 3/h		0	20	40	60	70	80	90	100	110	120	122
	l /min.		0	333	667	1000	1167	1333	1500	1667	1833	2000	2037
MODEL	MOTOR RATING		TOTAL HEAD IN (m)										
	KW	HP											
NP95-1	5.5	7.5	23	21	18	15	14	13	13	11	9	6	6
NP95-2	9.3	12.5	44	41	38	31	29	27	25	22	17	13	12
NP95-3	13	17.5	65	62	55	47	44	42	38	34	27	20	19
NP95-4	18.5	25	86	82	73	63	59	55	51	44	36	26	25
NP95-5	22	30	106	101	90	78	73	69	63	55	44	32	30
NP95-6	26	35	129	123	110	96	90	84	77	68	55	41	38
NP95-7	30	40	148	142	126	110	103	96	88	77	62	46	43
NP95-8	37	50	170	163	145	127	119	112	102	90	73	54	50
NP95-9	45	60	189	182	162	141	133	124	114	99	80	59	55
NP95-10	45	60	214	206	185	162	152	143	132	116	95	71	66
NP95-11	55	75	237	228	205	179	169	158	146	129	106	79	74
NP95-12	55	75	257	248	222	195	183	172	158	140	115	86	80
NP95-13	55	75	278	267	240	210	198	185	170	150	123	92	86
NP95-14	63	85	300	289	259	227	214	201	185	163	134	100	93
NP95-15	75	100	321	310	278	244	230	215	198	175	144	107	100
NP95-16	75	100	342	329	296	259	244	229	211	186	152	114	106
NP95-17	75	100	362	349	313	275	258	242	223	196	160	120	112
NP95-18	92	125	382	368	331	290	272	255	235	206	169	125	117
NP95-19	92	125	408	388	348	305	287	269	247	216	177	131	122
NP95-20	92	125	423	407	365	320	301	281	258	226	184	137	128

SS Submersible Pump

NP 95 SERIES

PERFORMANCE CURVE

95 m³/h

50 Hz / 2880 RPM

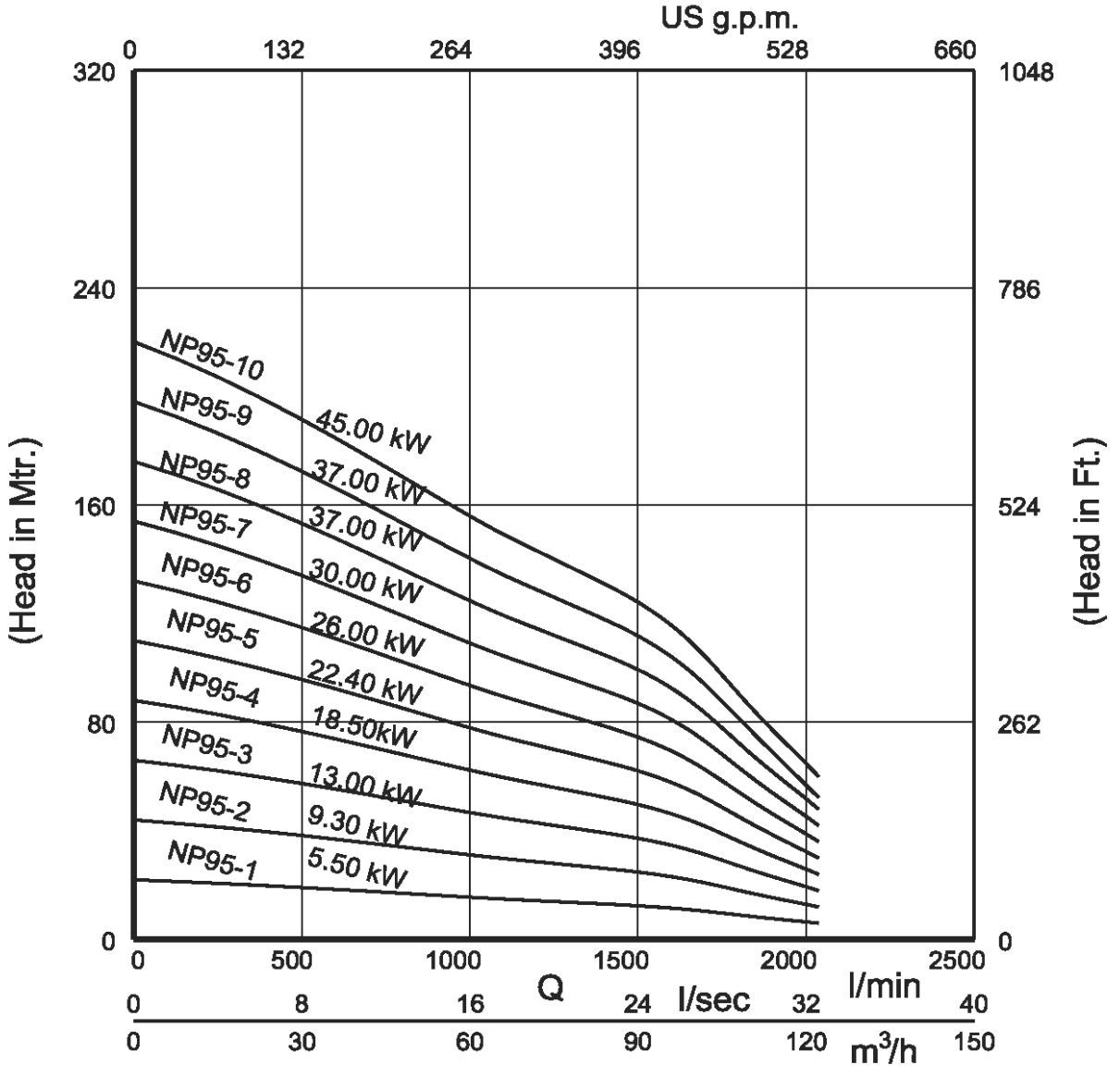

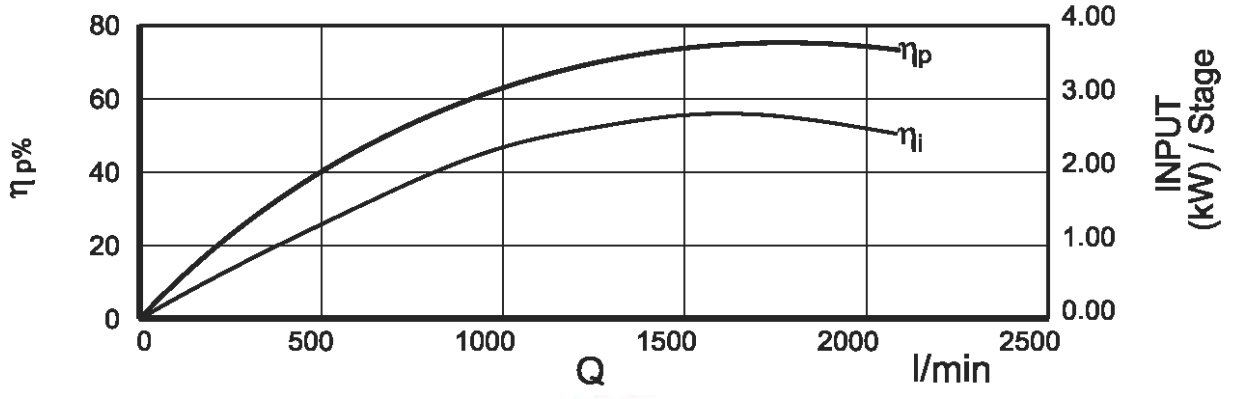

SS Submersible Pump

NP 95 SERIES

PERFORMANCE CURVE

95 m³/h
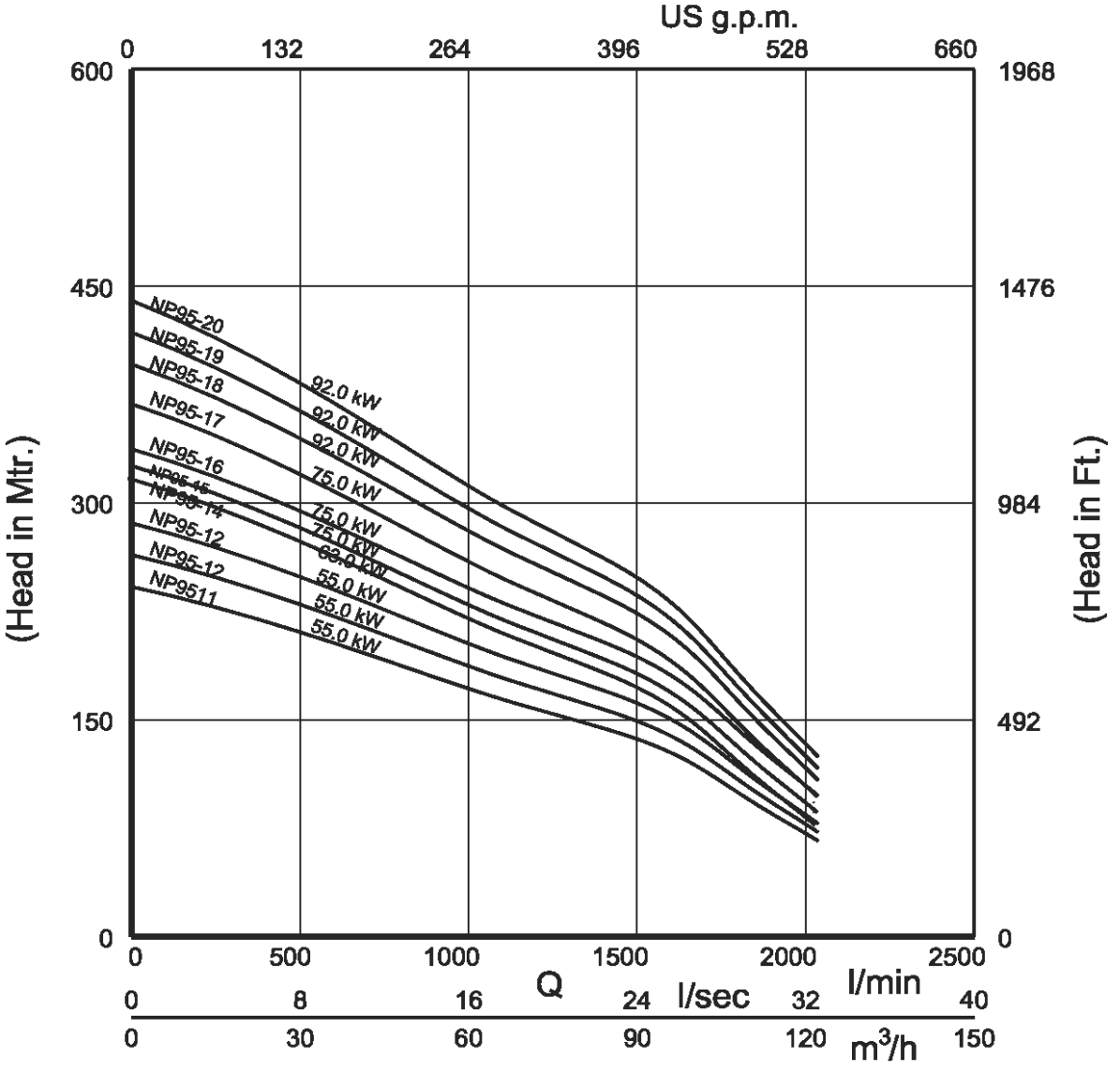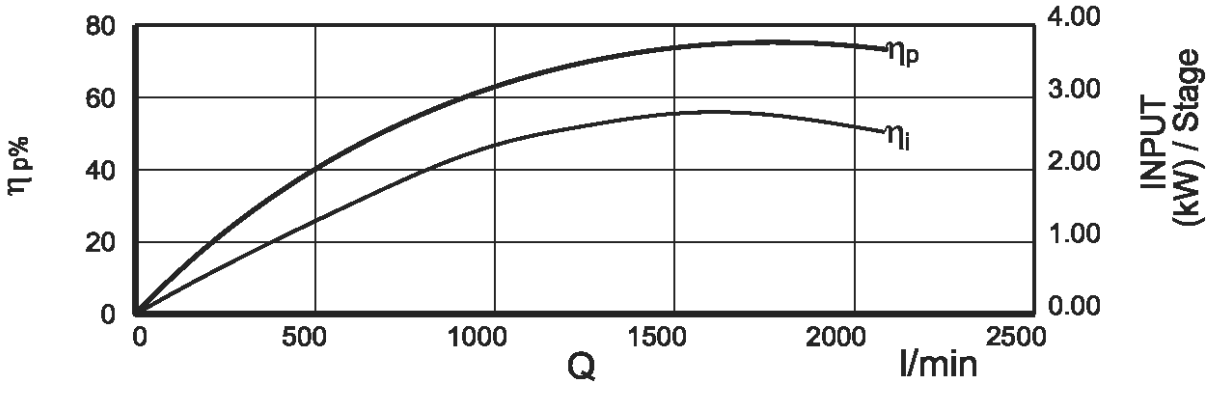
50 Hz / 2880 RPM